Quasi-steady phenomena (largely dominated by safety & environmental activities)

- IFE community adopted and adapted codes and data libraries originally developed for MFE studies for use in IFE safety work

- Development of large libraries of dose conversion factors (500+ radionuclides)

- Detailed safety assessments completed for HYLIFE-II and SOMBRERO:
  - Tritium (as HTO) dominates doses
  - Oxidation of SOMBRERO chamber was problematic with existing reaction rates → new measurements made by INEEL
  - Unirradiated flibe data added to MELCOR code

Safety & environmental activities, (Cont'd.)

- HYLIFE-II results:
  - Total dose ~0.5 rem for average weather conditions
  - Dose increases to ~5 rem for conservative weather conditions
  - Need data/analysis for irradiated flibe (and flinabe)
  - Need updated tritium inventory for likely structural material choices

- SOMBRERO results:
  - With new oxidation reaction rates, main risks are tritium and activation of target building fill gas
  - Two groups have examined replacement of Xe with Kr and suggested active removal of I and Cs isotopes from Xe
  - Gas contributions to dose range from 1.1 rem with Kr to 5.6 rem with Xe (no isotope removal)
  - Key question is tritium inventory and release fraction

Safety & environmental activities, (Cont'd.)

- Safety assessment completed for prototypical target fabrication facility:
  - Inventory needs to be segmented into multiple fill canisters and isolated fill rooms
  - Multiple fill rooms hooked to expansion tank via rupture disks
- Completed scoping studies for target and chamber wall materials, including evaluation for:
  - Accident dose
  - Contact dose rate (recycling)
  - Waste management
- Evaluated toxicological and radiological hazards for Pb and Hg → toxicological regulations more difficult to meet than radiological ones

Safety & environmental activities, (Cont'd.)

- Implemented clearance indices for removal of material from the waste stream
- Evaluated and greatly improved final focusing magnet lifetime for heavy-ion fusion; Still may need to deal with some quantity of waste that is above Class C
- Waste management discussions are active → is goal for all waste to be Class C or lower, regardless of total volume, the right one?
- Developed list of accident initiating events:
  - Master logic diagrams, which will be needed for thorough safety analyses, have been developed
  - Initiating events will also be a key input for reliability/availability assessments

Directions in safety & environmental work

- Additional work is needed to reduce HYLIFE-II and SOMBRERO doses to the 1 rem limit
- Tritium inventories need to be better understood → TPX
- Measurements of radionuclide release fractions → FLIQURE and STAR facilities
- Work with target designers/fabricators to reach consensus for target materials selection and the design of target fabrication facilities
- Engage community in discussions regarding sensible requirements for waste management (recycling, clearance, Class C, etc.)

Experimental facilities

- FLIQURE/STAR → will generate data for use with MELCOR
- TPX→ help in estimating tritium inventories
- Coolant loops for corrosion? What materials? When needed?
- Dust aerosol generation/transport → Facility(s)?
- Use operational experience to build/expand reliability database
- Radiation damage (neutrons & ions)
- Measurements for key S&E cross sections?

Computational tools

- Radiation transport/activation codes → in pretty good shape
- Thermal-hydraulics/chemical reactivity codes → MELCOR, CHEMCON:
  - Need models/database for behavior of additional materials
  - Need benchmarking against broader range of experiments
  - Expand MELCOR's chemical reactivity capabilities
- Use reliability database to develop models for availability?
- Dust aerosol generation/transport; tritium co-deposition
- Calculations for cross section uncertainties → identify if uncertainty constrains S&E results & perform measurements, if necessary/possible

- BOP reliability/T recovery/etc.Pulsed irradiation issues?

Backup slides

Accident analysis for HYLIFE-II: results

- **Radioactive afterheat is low enough that temperatures immediately fall even in case of total LOCA**
- **Total off-site dose dominated by the tritium (flibe and SS304 contribute with less than 1%)**
- **Accident dose = 0.5 rem with average weather conditions and ground release**
- **If we consider conservative weather, dose would be 10 x higher**

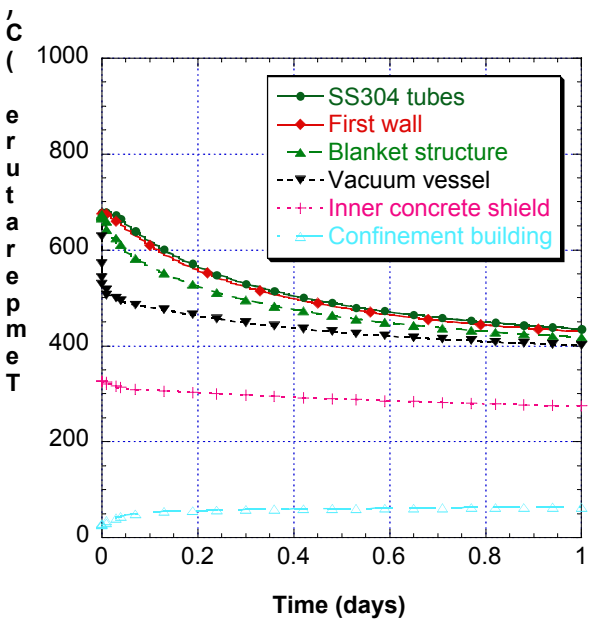

Radioactive source	Off-site dose LOCA	Off-site dose LOFA
SS304	3.3 μSv / 0.33 mrem	14.0 μSv / 1.40 mrem
Flibe	2.3 μSv / 0.23 mrem	12.4 μSv / 1.24 mrem
HTO	4.6 mSv / 0.46 rem	5.0 mSv / 0.5 rem

Accident analysis for SOMBRERO: results

- Afterheat is low enough to allow rapid cooling of structures (T < 1000 ºC in less than 1 minute)

- Recent experiments on carbon oxidation indicate no oxidation at accident temperatures, more studies are under way

- Tritium retention in carbon structures is a critical issue that still needs to be addressed

- The activation products for Xe (cesium and iodine) are the main contributors to accident dose, possible solutions are:
  - removal of I and Cs by the chamber vacuum system
  - use of alternative gas such as Kr

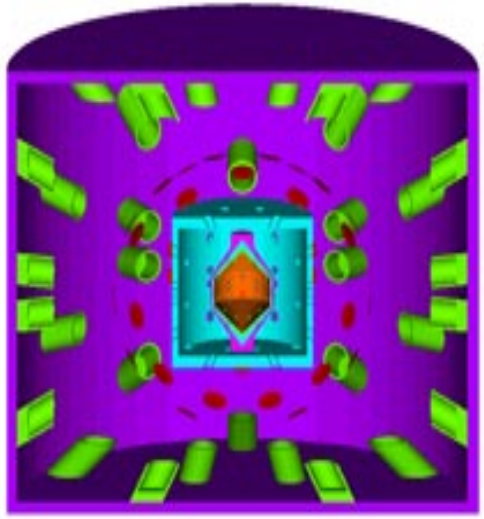

SOMBRERO model for neutron transport

Preliminary accident analysis of a target fabrication facility

- We have considered a generic target fabrication facility producing various types of targets and using different fabrication technologies
- T and high-Z material inventories calculated assuming a throughput of 500,000 targets/day
- Need to optimize number of canisters and volume of the expansion tank

MELCOR model for accident analysis simulates failure of a single canister

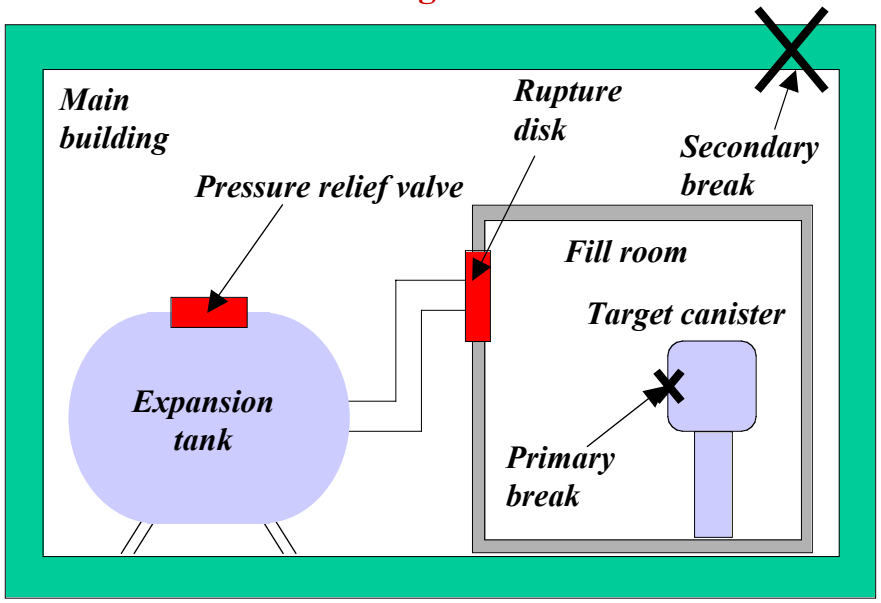

Tritium release fractions fall rapidly with increasing expansion tank volume

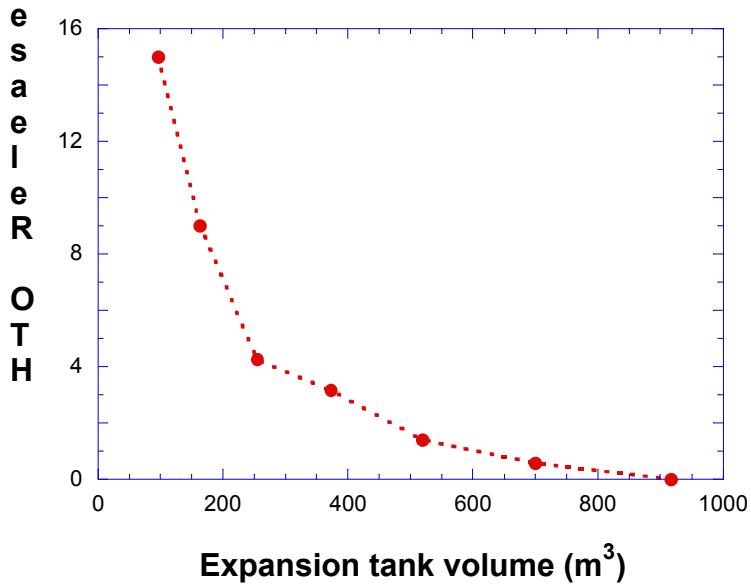

IEs are being identified for IFE designs

- **Techniques for IE identification in HYLIFE-II and SOMBRERO include:**
  - **preliminary hazard analysis to identify energy sources**
  - **review of operating experiences from existing, similar facilities (i.e., laser facilities, tritium handling facilities, accelerators)**
  - **review of past safety analyses applicable to IFE designs (NIF, Tritium Systems Test Assembly, past IFE safety studies)**
  - **master logic diagrams (MLDs)**

Preliminary Master Logic Diagram for the SOMBRERO design, showing one branch expanded to level 7

Summary of S&E characteristics of potential target materials

Element	Code	Element	Code	Element	Code
Li	P	Be	P	B	P
C	P	N	W	O	P
F	P	Ne	P	Na	C
Mg	C	Al	CW	Si	P
P	P	S	P	Cl	W
Ar	W	K	W	Ca	W
Sc	C	Ti	C	V	C
Cr	C	Mn	C	Fe	C
Co	CA	Ni	CWA	Cu	C
Zn	C	Ga	P	Ge	C
As	C	Se	CW	Br	CWA
Kr	W	Rb	C	Sr	C
Y	C	Zr	C	Nb	CW
Mo	CW	Ru	CW	Rh	CW
Pd	CW	Ag	CW	Cd	CW
In	C	Sn	P	Sb	C
Te	CWA	I	C	Xe	C
Cs	C	Ba	C	La	P
Ce	C	Pr	P	Nd	C
Sm	CW	Eu	CWA	Gd	W
Tb	CW	Dy	W	Ho	W
Er	CW	Tm	CW	Yb	P
Lu	C	Hf	C	Ta	C
W	C	Re	CW	Os	CW
Ir	CW	Pt	W	Au	C
Hg	P	Tl	C	Pb	P
Bi	CW				

C = failed contact dose rate criterion (dose < 30 MGy for 30 years, continuous exposure);
W = failed waste management criterion (WDR < 1);
A = failed accident dose criterion (early dose < 5 mSv for 0.3% release);
P = passed all criteria.

⇒ **Opportunities exist to modify contact dose rate and waste management criteria and expand the list of acceptable materials**

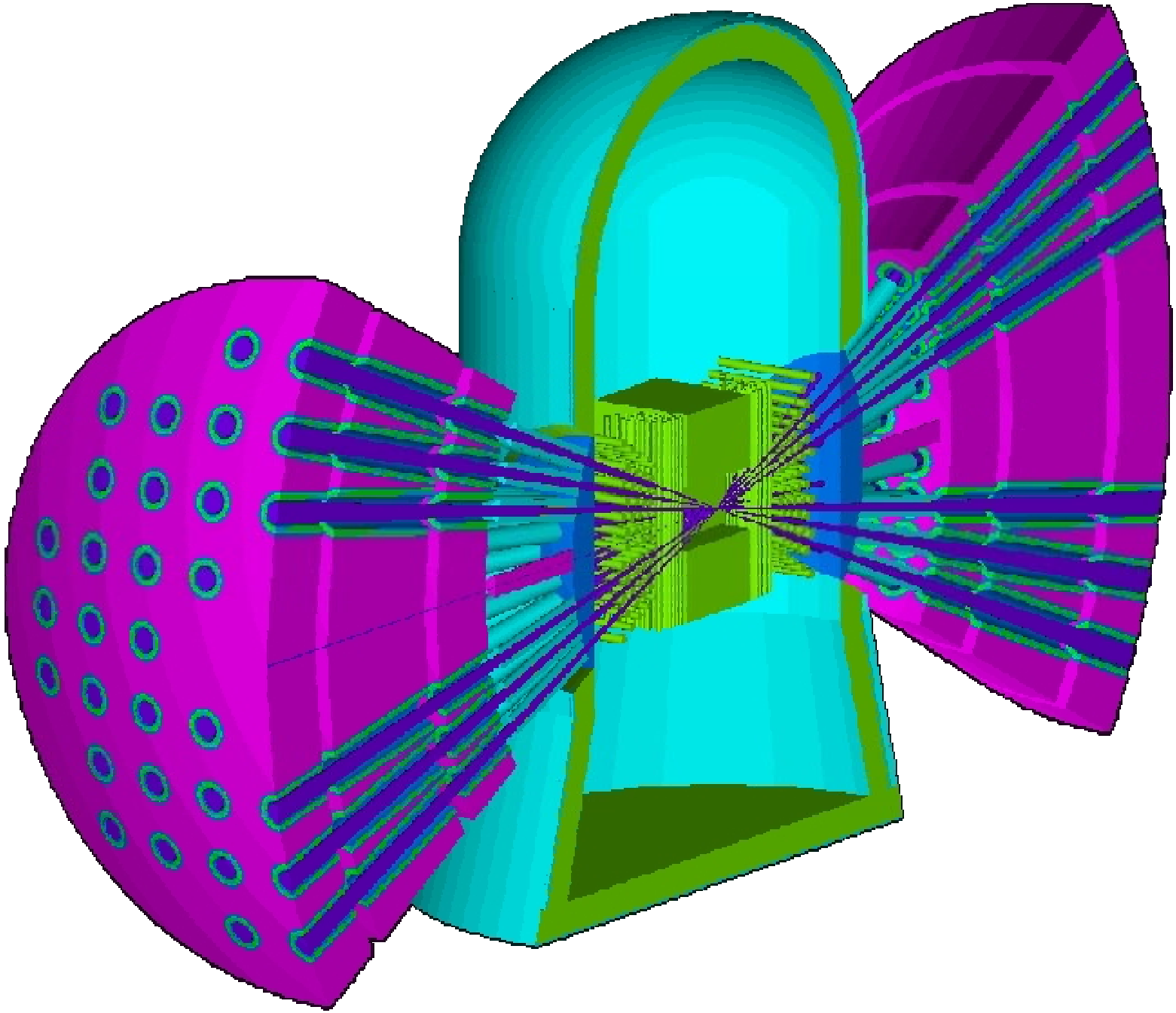

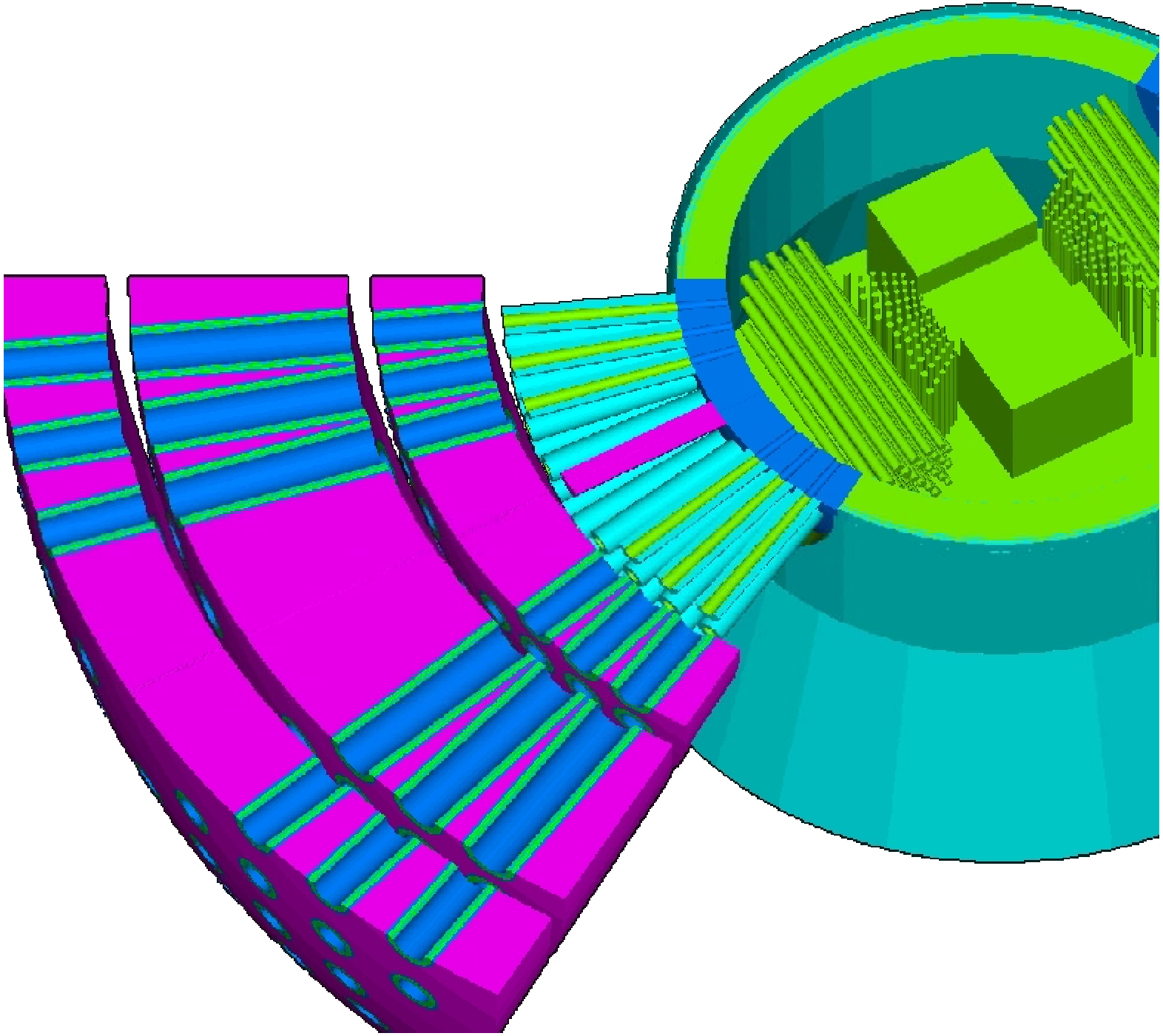

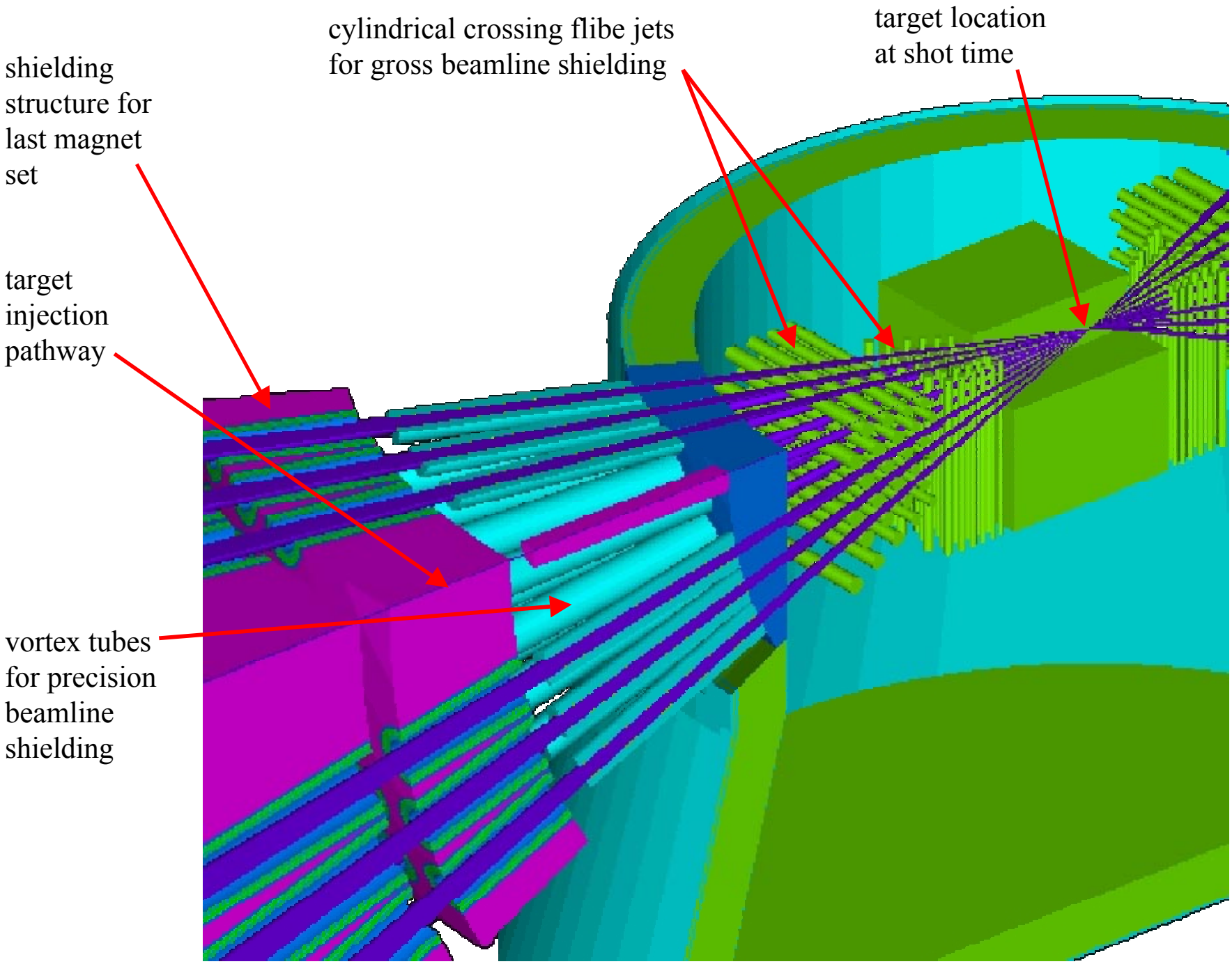
shielding structure for last magnet set
cylindrical crossing flibe jets for gross beamline shielding
target location at shot time
target injection pathway
vortex tubes for precision beamline shielding

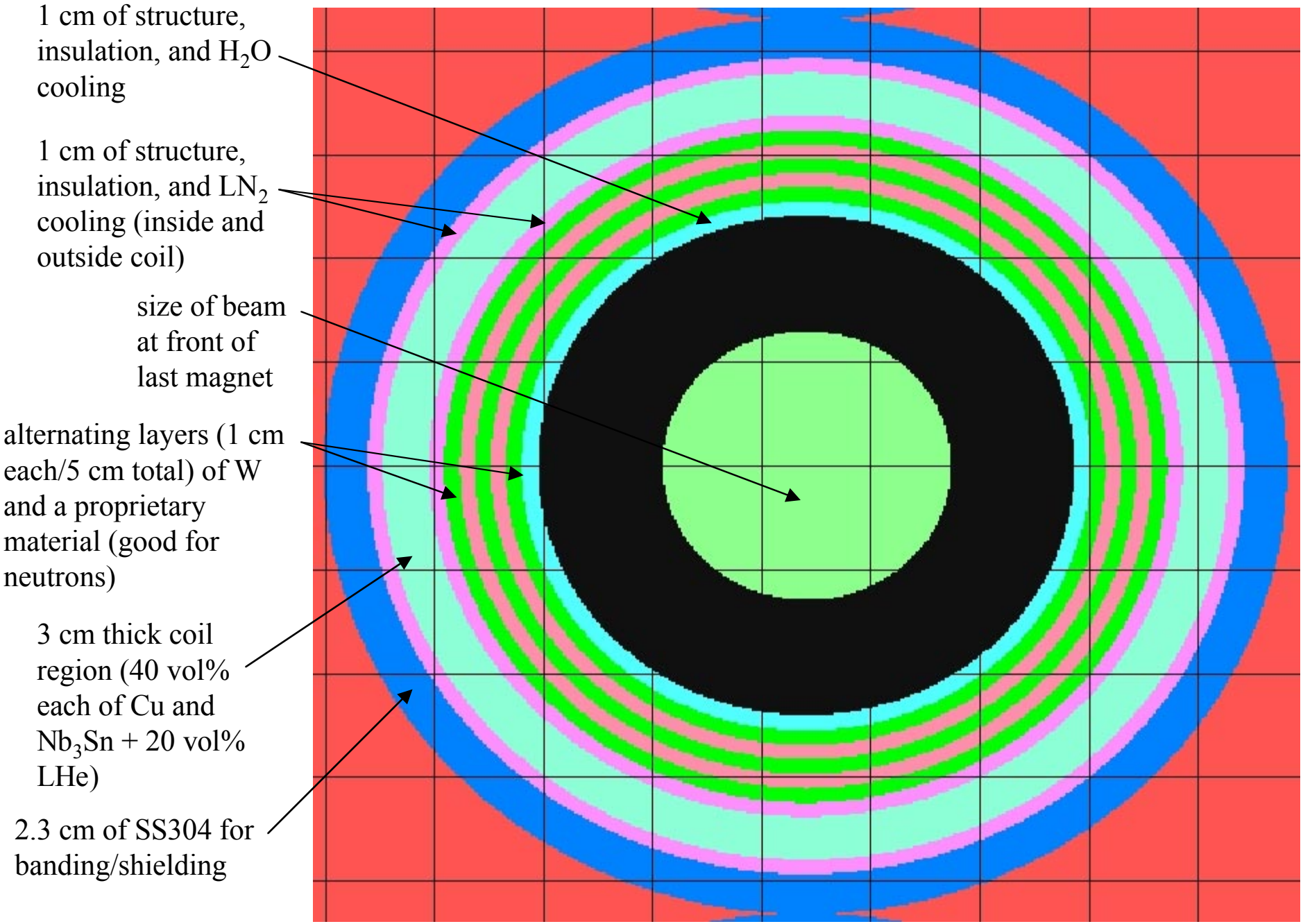
1 cm of structure, insulation, and H_2O cooling
1 cm of structure, insulation, and LN_2 cooling (inside and outside coil)
size of beam at front of last magnet
alternating layers (1 cm each/5 cm total) of W and a proprietary material (good for neutrons)
3 cm thick coil region (40 vol% each of Cu and Nb_3Sn + 20 vol% LHe)
2.3 cm of SS304 for banding/shielding