Tritium-Carbon Codeposition: Implications of JET Experience for a Divertor BPX

Peter Stangeby

University of Toronto,
DIII-D,
JET Team 1984-1999

Main message:

There are good prospects for improving substantially on JET's 17% T-retention, keeping open the C-option for a divertor BPX.

Snowmass 16 July 2002

In limiter-JET the C deposition was 'all over the place'

Table 1
Amounts of deuterium retained in the JET vessel after different campaigns

	1985	1986	Estimate for August 1987 [f]	May '88	October '88	Estimate after 1989 [g] (all phases)
Number of pulses in deuterium	≃ 1800	≃ 2800	≃ 250	≃ 2500	≃ 4000	≃ 1700
D gas input		$\simeq 8.8 \times 10^{24}$	$\simeq 8.1 \times 10^{23}$	$\simeq 6.4 \times 10^{24}$	10.6×10^{24}	
Amounts retained: Inner wall	1.3×10^{23}	1.5×10^{23}	2.5×10^{23}	2.5×10^{23}	5.7×10^{23}	1.7×10^{23}
Limiters	$\simeq 0.1 \times 10^{23}$	$\simeq 10^{23}$	$\simeq 1.6 \times 10^{23}$	$\simeq 2.5 \times 10^{23}$	3.1×10^{23}	1.6×10^{23} [d] 0.5×10^{23} [e]
RF/antennae			0.8×10^{23}	$\sim 0.6 \times 10^{23}$	0.4×10^{23}	$\sim 0.6 \times 10^{23}$
Poloidal tiles	–	0.6×10^{23}	$\simeq 2 \times 10^{23}$ [c]	4.5×10^{23}	6.3×10^{23}	2.1×10^{23}
Vessel wall	4.5×10^{23}	1.0×10^{23}	0.4×10^{23}	0.7×10^{23}	$\simeq 0.8 \times 10^{23}$	0.9×10^{23}
Total	$\simeq 5.9 \times 10^{23}$ ($\simeq 2.4 \times 10^{23}$) [a]	$\simeq 3.5 \times 10^{23}$	$\simeq 7.3 \times 10^{23}$ [b]	10.8×10^{23}	16.3×10^{23}	7.4×10^{23}
% gas retained	$\simeq 16$ (~ 4) [a]	$\simeq 4$	$\simeq 90$ [b]	16.9	15.5	
Atoms retained per pulse	($\simeq 1.3 \times 10^{20}$) [a]	$\simeq 1.3 \times 10^{20}$	$\simeq 3 \times 10^{21}$ [b]	$\simeq 5 \times 10^{20}$	4.1×10^{20}	4.4×10^{20}

[a] Brackets denote figures disregarding D from carbonisation of walls.
[b] Small number of samples, so large errors. Also contributions from previous campaign due to re-use of some components.
[c] Based on average for X-point region – amounts elsewhere may be less.
[d] Be evaporation phase.
[e] Be limiter phase.
[f] Small number of samples.
[g] Small number of samples due to Be-contamination restrictions.

The experience of limiter TFTR was broadly similar.

In divertor-JET the C-deposition, hence theT-codeposition, was highly localized → *a natural 'getter' action.*

EFDA EUROPEAN FUSION DEVELOPMENT AGREEMENT Task Force E JET

JET MKIIA Divertor: Tritium retention

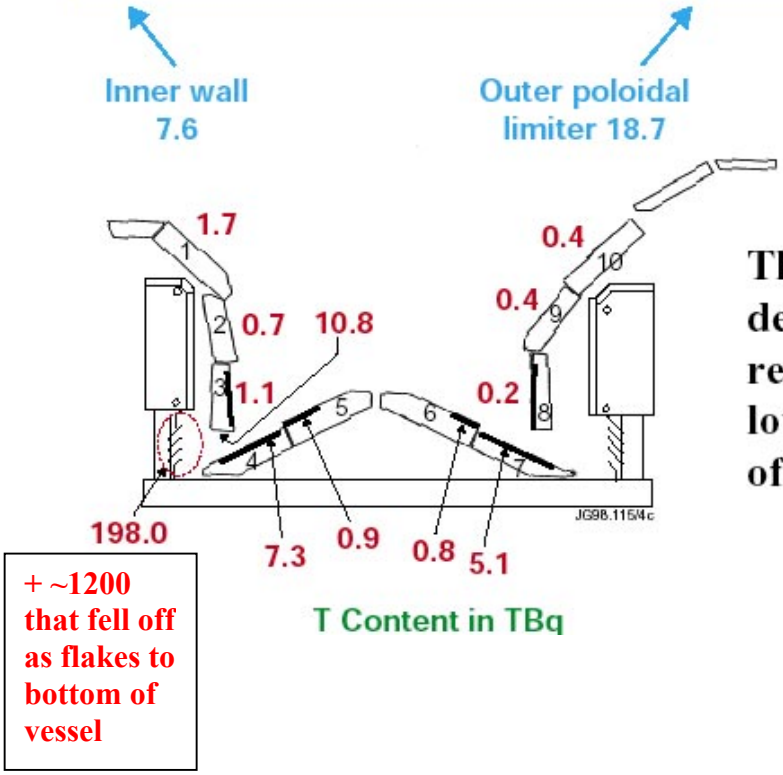

The majority of carbon deposition and tritium retention is on remote areas louvres and shadowed parts of tiles

+ ~1200 that fell off as flakes to bottom of vessel

J.P.Coad

Total T input: 13860 TBq (35gm)

Retained in vessel after cleanup: 17%

- **Released by venting (H_20): 7.1%**
- **Deposited on louvers: 9.5%**
- **Deposited on tiles: 0.4%**

17%

High speed flow along divertor SOLs, from outerside to innerside is key: C released from walls has small chance of redepositing on main wall, but is carried into inner divertor.

Cross-section of JET

Transport of impurities (in Mk IIA configuration)

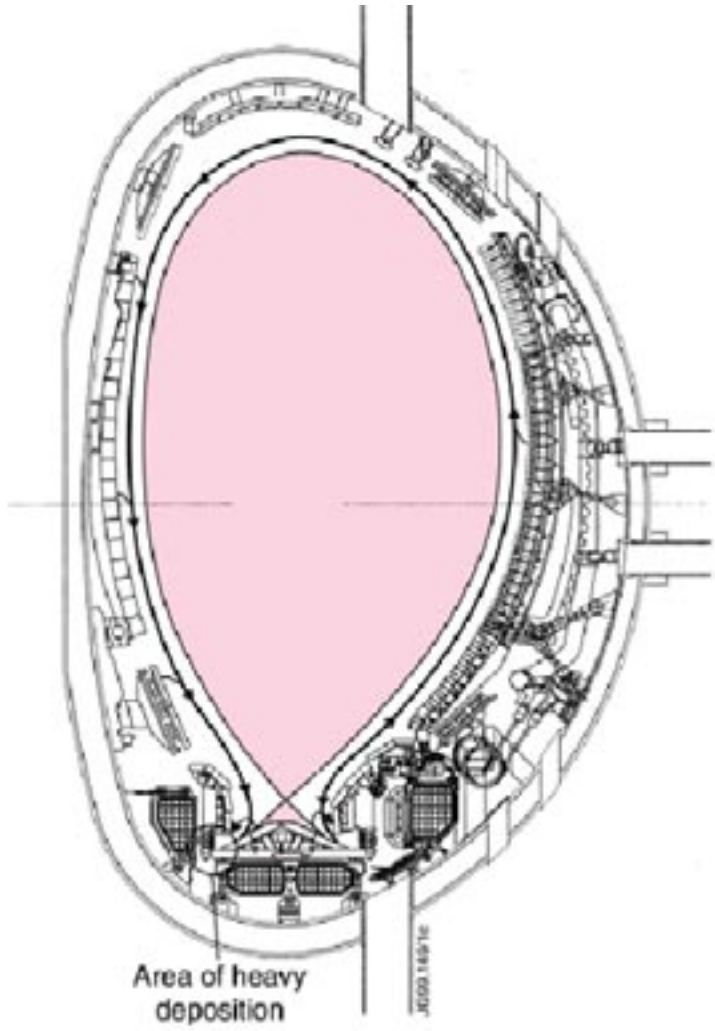

J.P. Coad

The same SOL plasma flow pattern has been observed on JT-60, C-MOD, DIII-D.

The same C deposition pattern – inner divertor dominated – has been observed in DIII-D, AUG.

Large SOL flows observed in JET

SOL Flow:

- **Similar in Ohmic, L and H-mode**
- **Reverses when B×∇B↑**

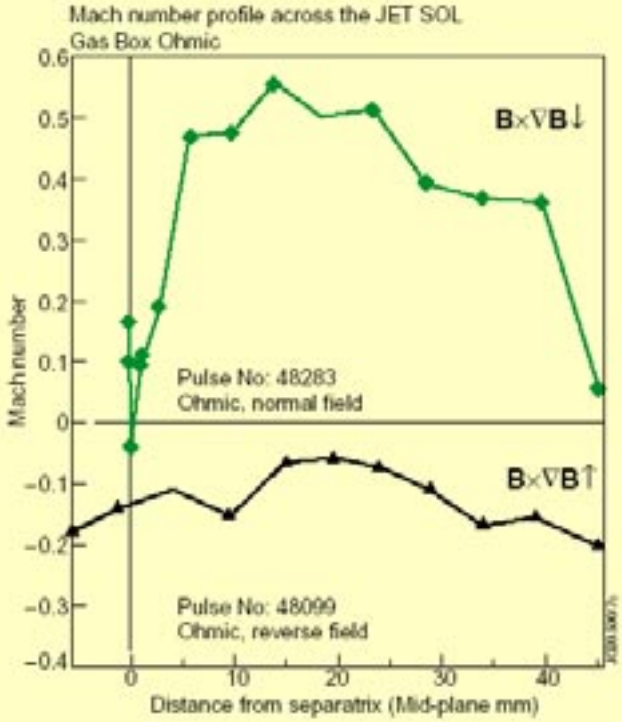

Erents

Possibilities for reducing the in-vessel T-inventory

Retained in vessel after cleanup: 17%

1. **Released by venting: 7.1%**
2. **Deposited on louvers: 9.5%**
3. **Deposited on tiles: 0.4%**

17%

- **Venting to ~ 1 atm nitrogen released almost no T, but venting to air released 7.1% of total input, presumably via H_20 exchange with deposits, most of which are on the louvers or the louver flakes.**

- **∴ assume that louvers captured ~7.1% + 9.5% = 16.6%, most of which was in flakes that dropped to the bottom of the vessel.**

- **- design louver surface to also be heatable, to make this natural getter into a recyclable one**

- or let C-flakes fall off into a trough, which can be removed.

Also to be allowed for:

- **ITER walls will be Be, not C as in JET**

- **Chemical sputtering of C may be reduced to very low levels by prolonged, intense plasma exposure, perhaps also requiring doping by B or Be (indicated in DIII-D after 10 year's exposure of tiles and ~30 boronizations)**

- **Research is underway on DIII-D, PISCES, etc. in pursuit of this objective of reducing the retained-T to << 17%.**

- **At 17% retention, ITER reaches 350 gm in-vessel inventory limit in ~20 (400s) shots. At 0.4% retention, ~10^3 shots.**

There are good prospects for improving substantially on JET's 17% T-retention, keeping open the C-option for a divertor BPX.