ITER Diagnostics

- **G. Janeschitz[1]**

Forschungszentrum Karlsruhe EuratomAssociation

Overview of diagnostic access into ITER-FEAT

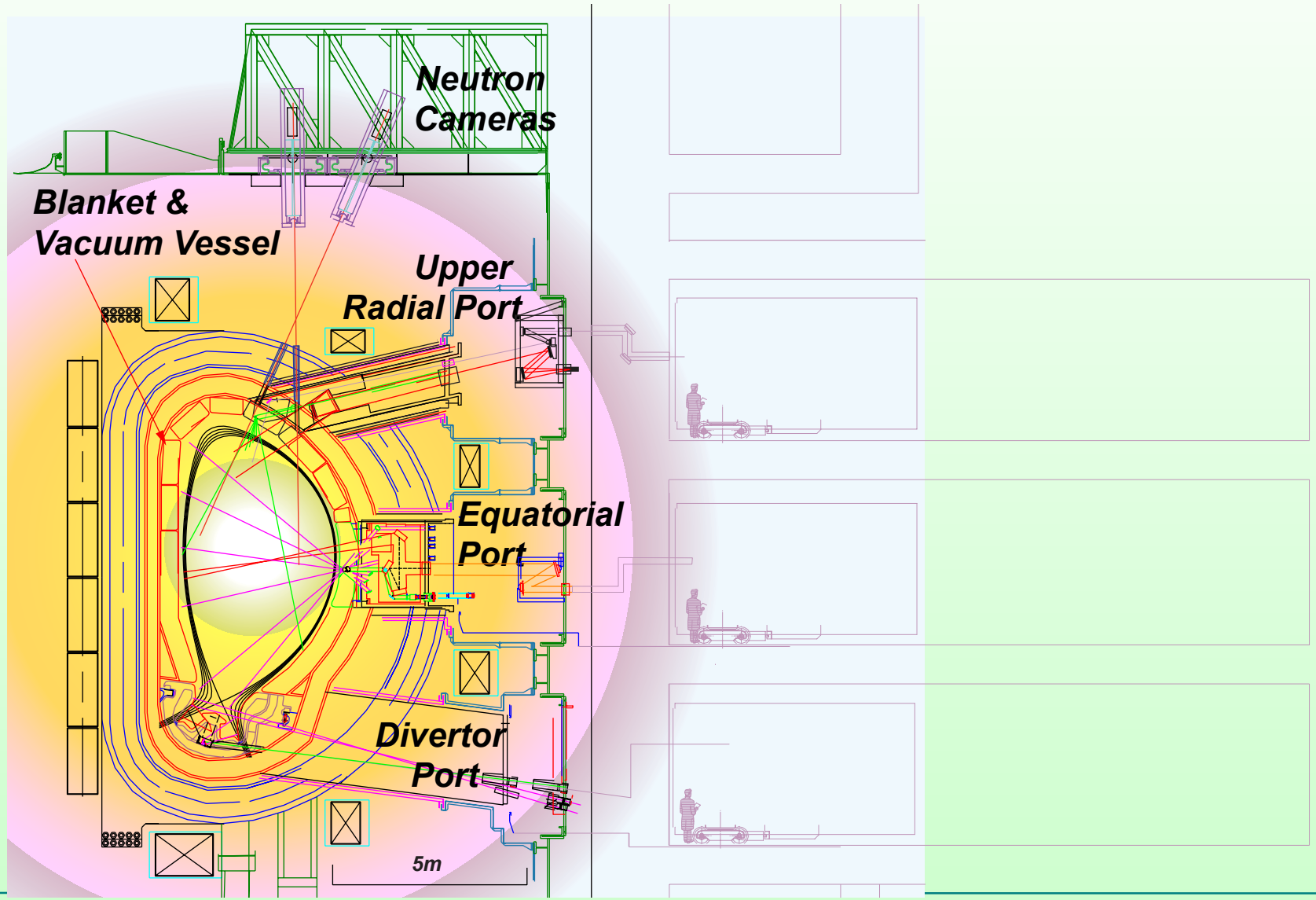

Diagnostic Access in ITER

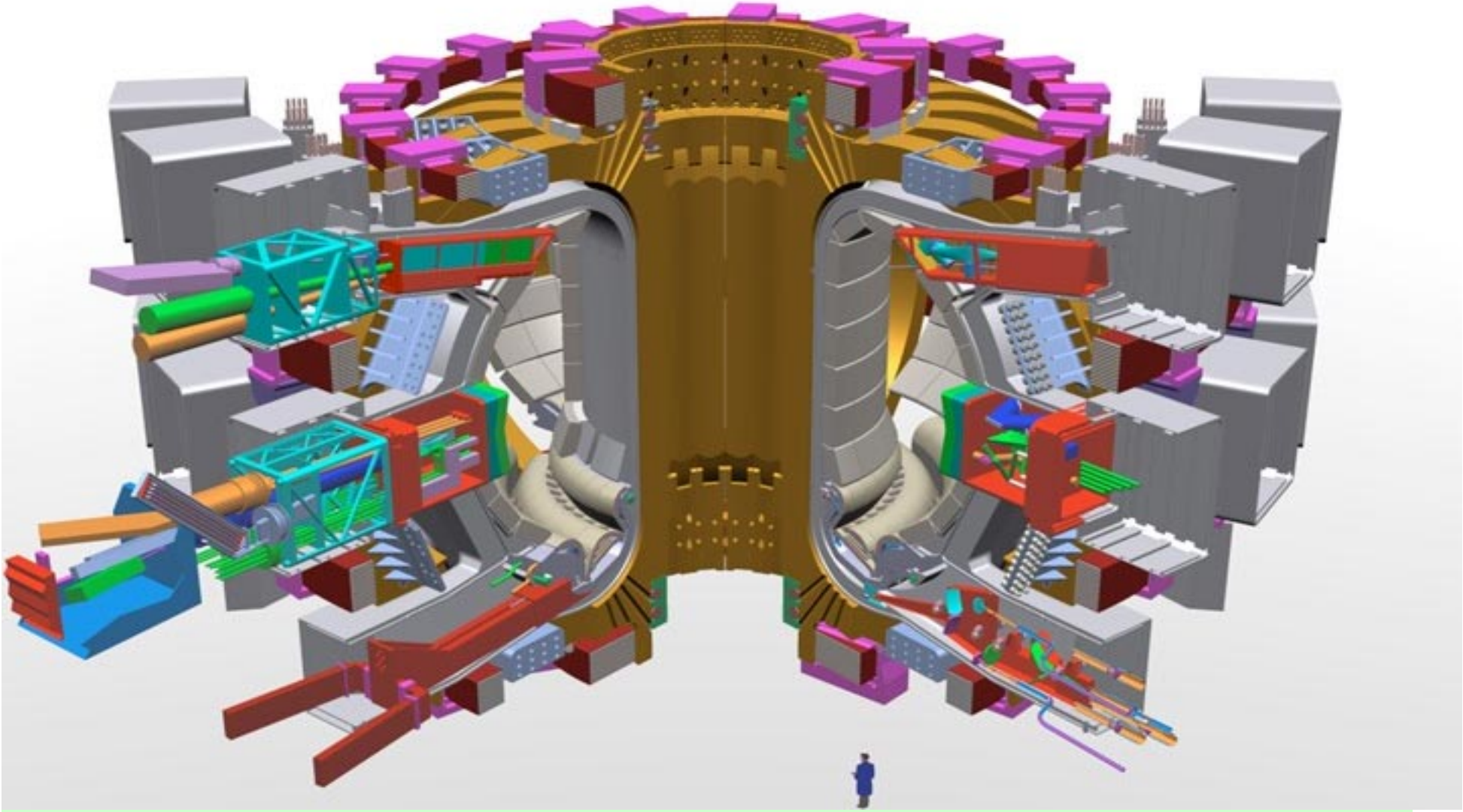

Diagonstics foreseen at the ITER upper ports

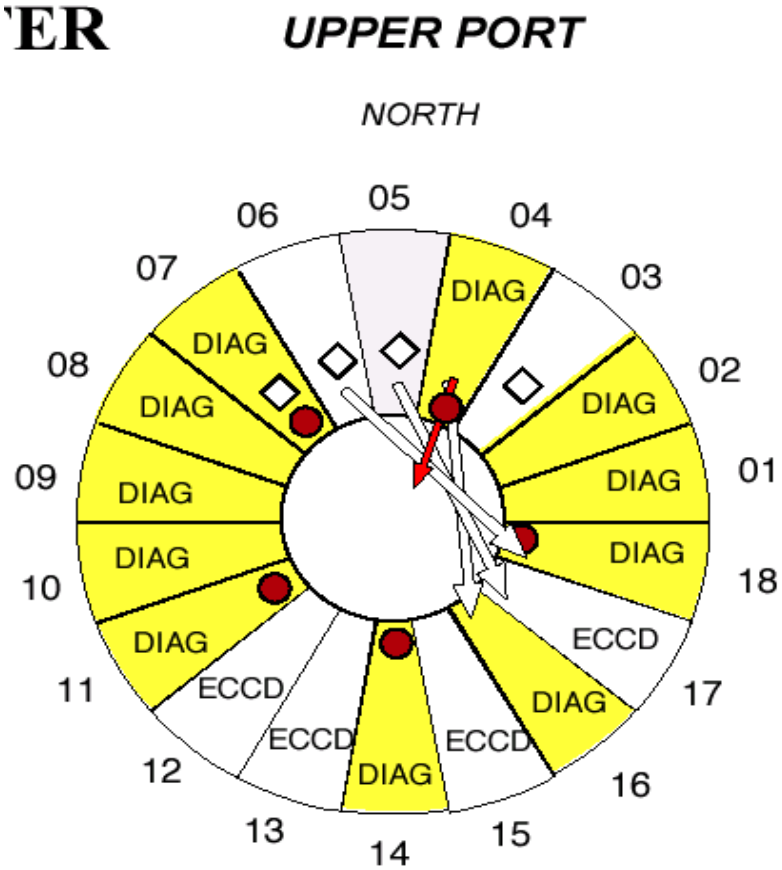

1 Active Spectr (MSE)
Neutron Act syst (^{16}N)

2 H-alpha /Visspec(inner edge)
Main plasma reflect.

3 Neutron Camera ◇

4 CXRS(pol rotn - DNB)
Wide angle viewing/IR

5 Neutron Camera ◇
Neutron Act syst (^{16}N)

6 Neutron Camera ◇
Neutron Act syst (foil)

7 Neutron camera ◇
Wide angle viewing/IR

8 Bolometry
Position Reflectometry

9 H-alpha/Vis. spec (upper edg

10 VUV,
X-ray Crys Array
Neutron Act syst (foil)

11 Edge Thomson scattering
Wide angle viewing/IR

14 Wide angle viewing/IR
Position Reflectometry

16 Bolometry
Soft X-Ray
Divertor Impurity (div16)

18 Wide angle viewing/IR
H-alpha/Vis. spec (outer edg

all In-vessel diagnostic wiring

Diagnostics foreseen for the ITER Equatorial Ports

EQUATORIAL PORT

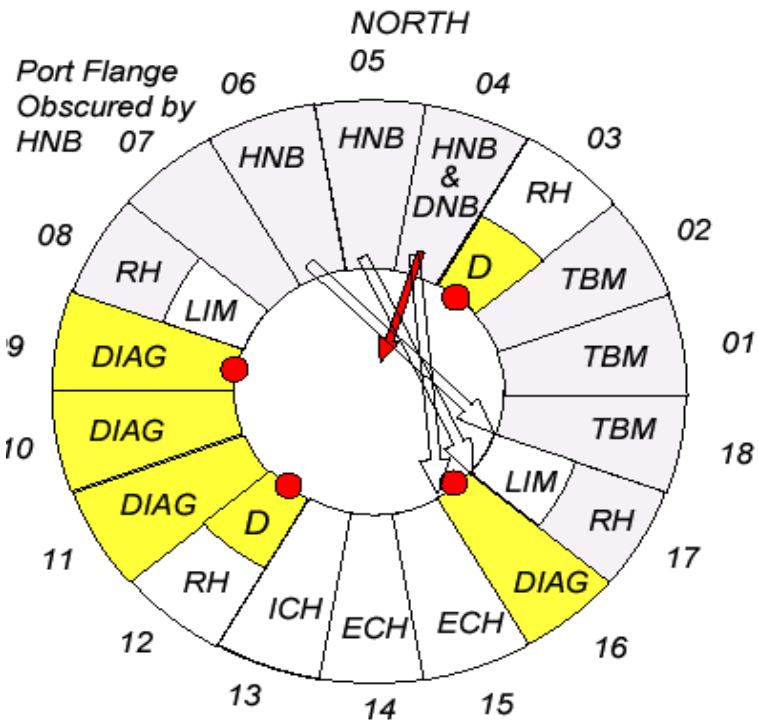

3 Wide angle viewing/IR
CXRS (with DNB)
MSE (with heating NB)
H-alpha/Vis spect (Div).

4 DNB

7 Obscured port

8 RH plus Limiter
Neutron flux monitor

9 Wide angle viewing/IR
Tor./Intefer. polarimeter
ECE
Fast Wave Reflectometry
(possibly) MSE

10 LIDAR Thomson Scattering
Polarimeter

11 X-ray Cryst spec
NPA
VUV (main & div.)
Reflectometry

12 Wide angle viewing/IR
H-□ /Vis. spec (upper edge)
Vis. continuum array

16 Wide angle viewing/IR
Radial Neutron Camera
Bolometry
Soft x-ray array
Divertor Impurity (div 16)

17 RH plus Limiter
Neutron flux monitor
Neutron Act syst (foil & ^{16}N)

Unassigned:
Collective scattering

Diagnostics forseen for the ITER Divertor

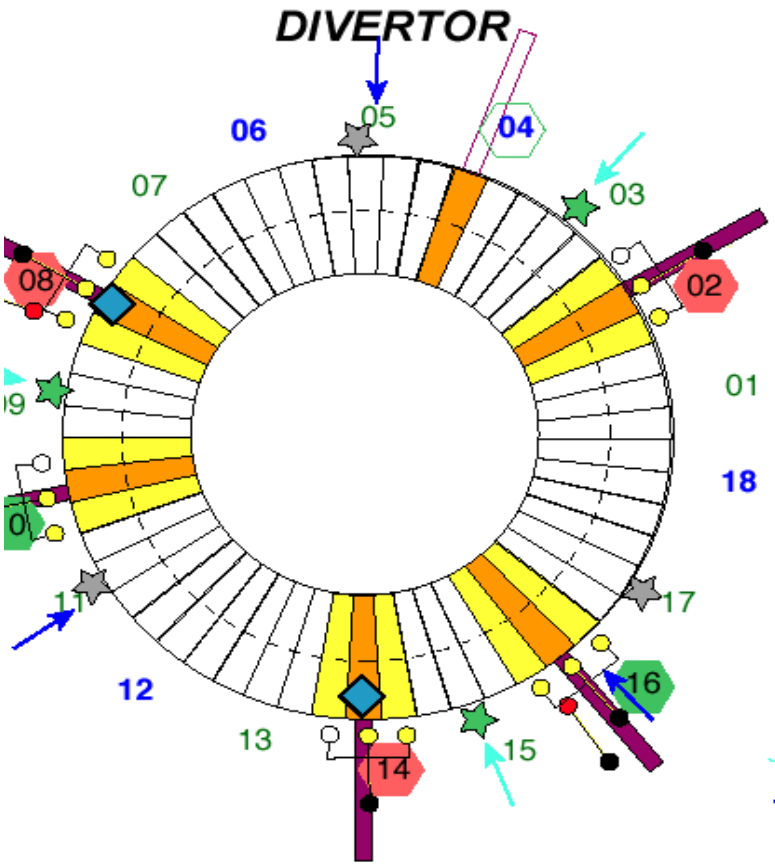

2 VUV Impurity Monitor (g)
IR Thermography (c)
Langmuir Probes
Magnetics Thermocouples

4 CXRS(c)
Dust measurement(g),
Magnetics

8 Reflectometry/Interferometry(g)
LIF (c)
Bolometry , Magnetics
Pressure Gauges

Port

Div. RH large ports
RH-like diag. ports

GDC & IVV (L) plugs
IVV (L)
Gas (GIS) &
Pellet (PIS) (tubes)

10 X-point LIDAR (c)
Div Thomson Scattering (g)
Bolometry, Magnetics
Langmuir Probes
Pressure Gauges,

14 Reflectometry/Interferometry (
Plate Erosion (c)
Magnetics, Thermocouples
Langmuir Probes

16 Visible Div Impurity Monitor (c
Bolometry, Magnetics
Pressure Gauges,
Thermocouples

Alloc 7-5-02

Diagnostic systems are integrated into Equatorial and Top Port Plugs

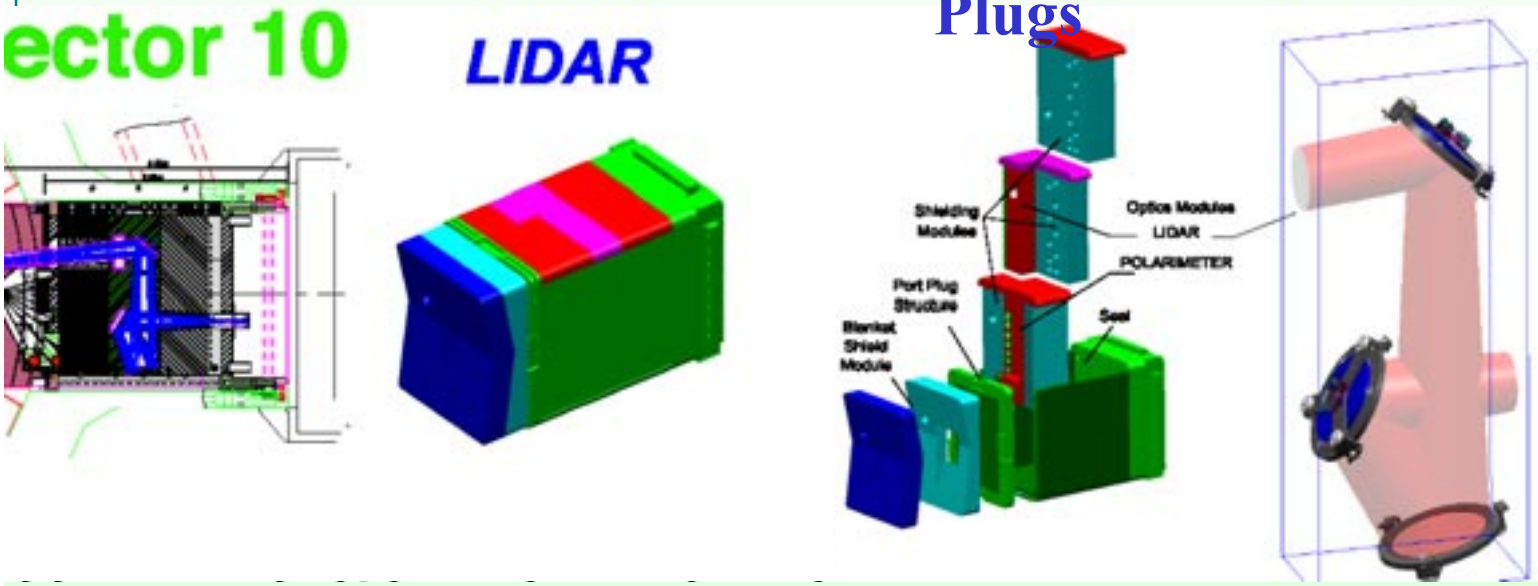

Lidar mirror System inside the Plug

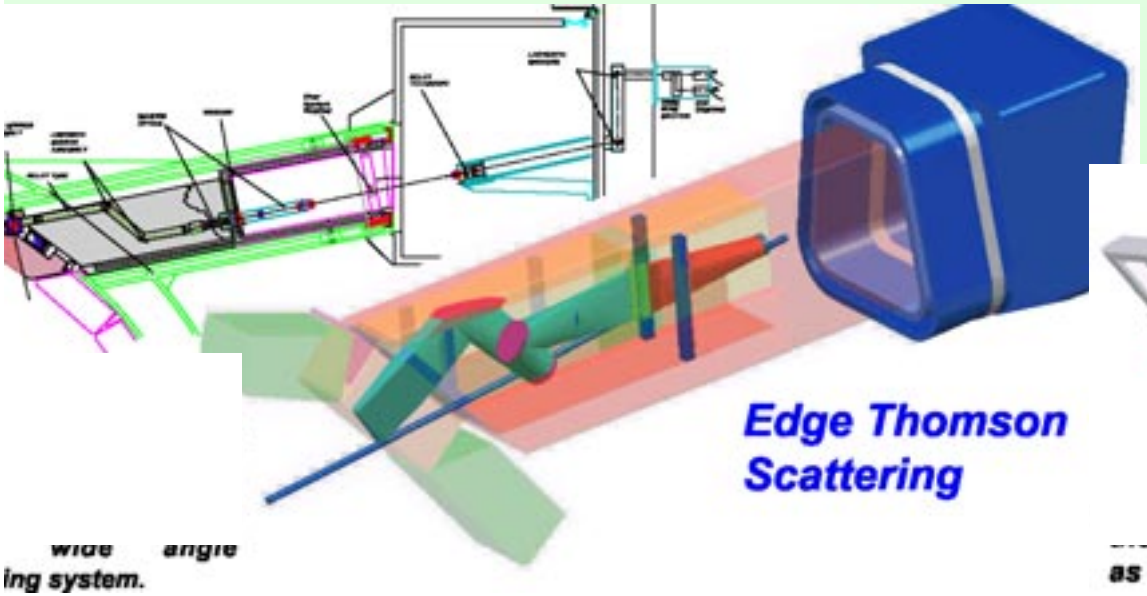

X-ray and VUV diagnostic upper pc

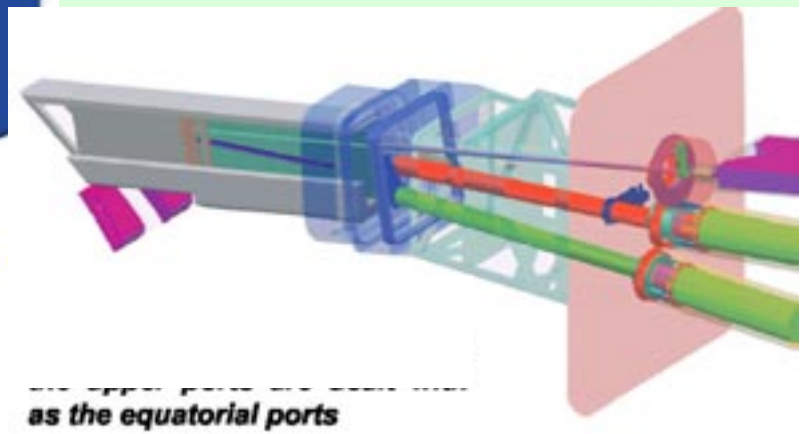

Divertor Diagnostic Cassettes

sides of the cassettes is machined to give support and cooling to rtor instrumentation and cables. Connection is made with the RH ipulator to cabling fixed within the divertor ports.

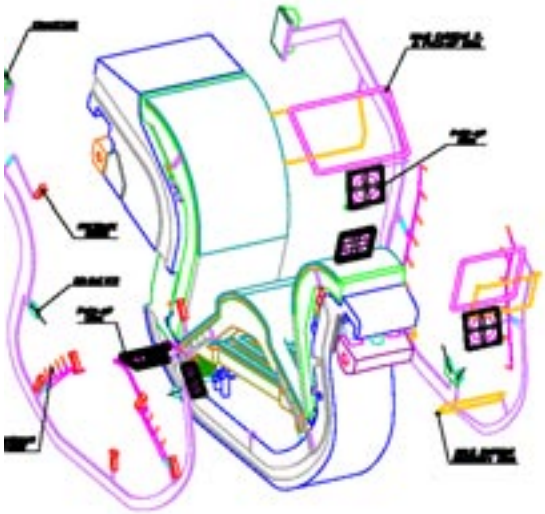

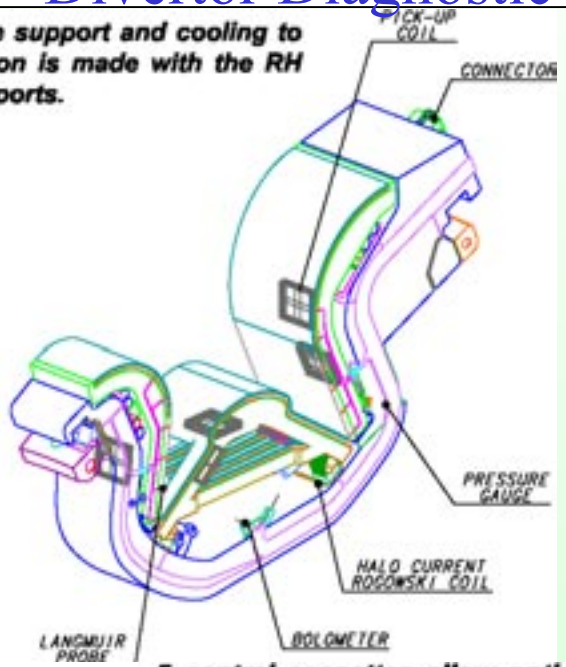

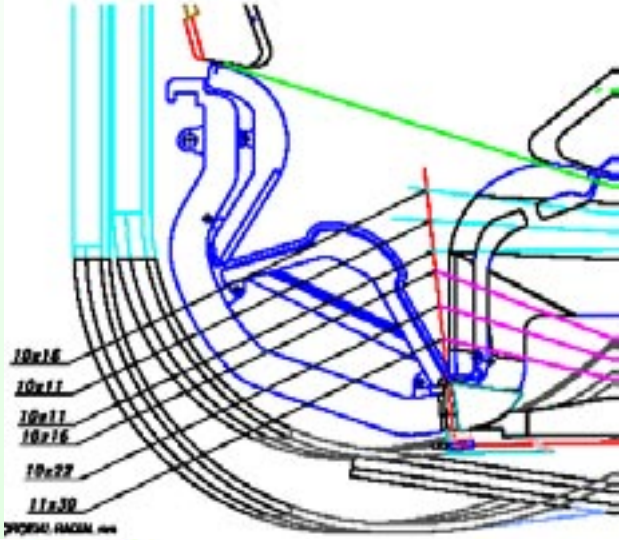

Modified cassettes give access to divertor Thomson scattering System

5 central cassettes allow optical diagnostic signals to be brought out into the port. Support, cooling, and protection from deposition are issues requiring detailed design.

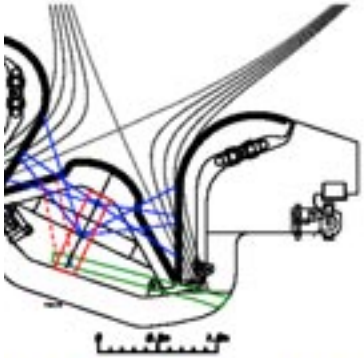

ivertor Impurity
onitor

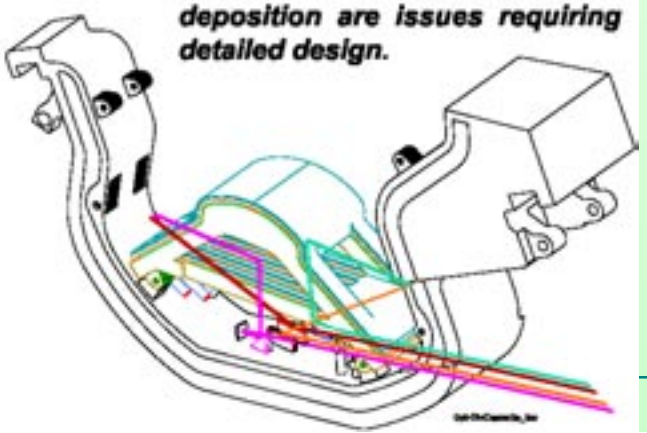

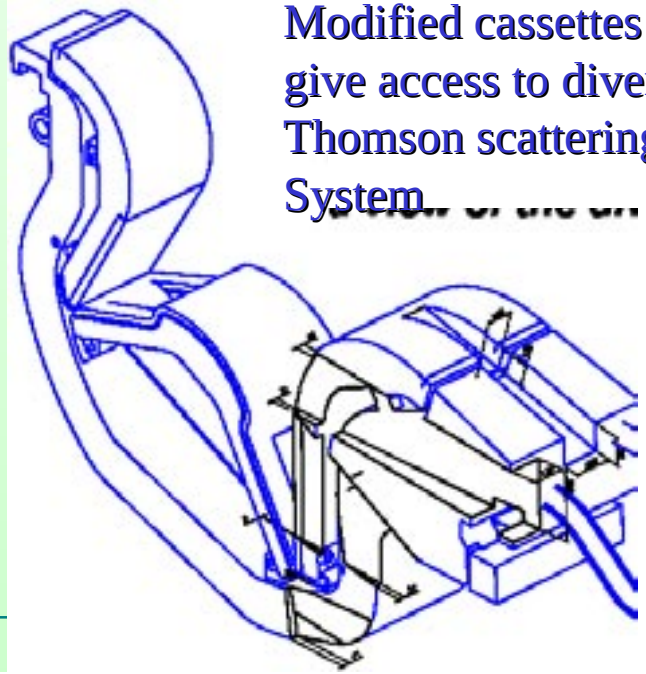

Forschungszentrum Karlsruhe

In vessel diagnostic (Magnetics, Bolometer …)

Cable looms from the In-Vessel diagnostics are routed through the upper ports

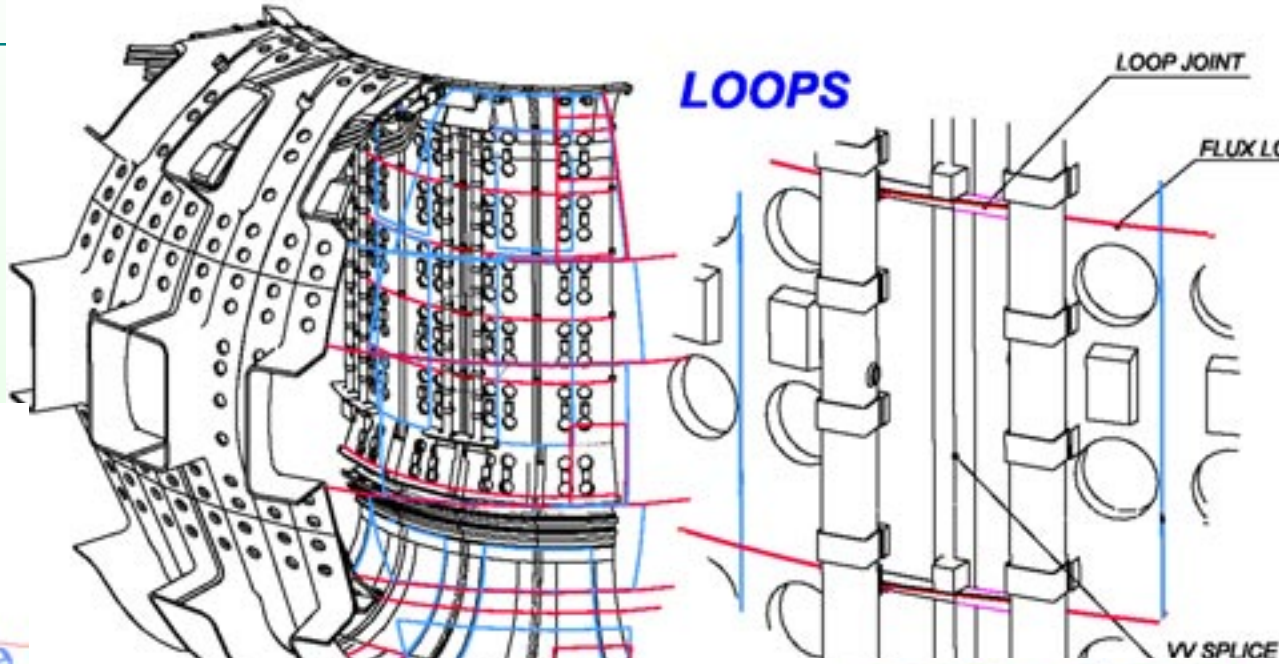

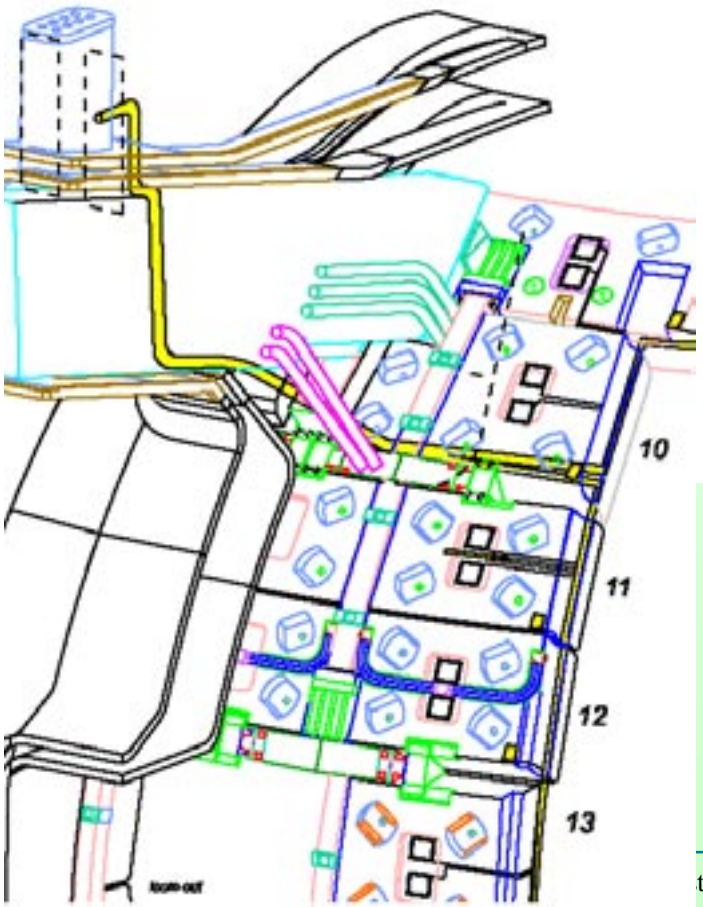

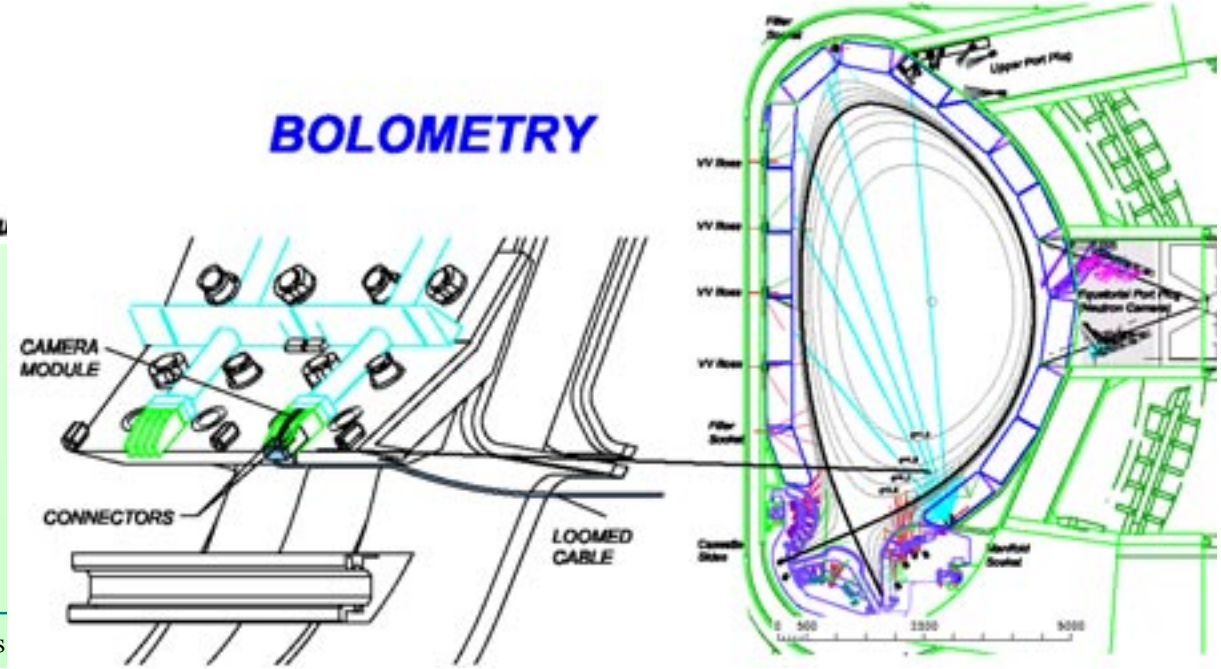

Diagnostic refurbishment in the Hot Cell

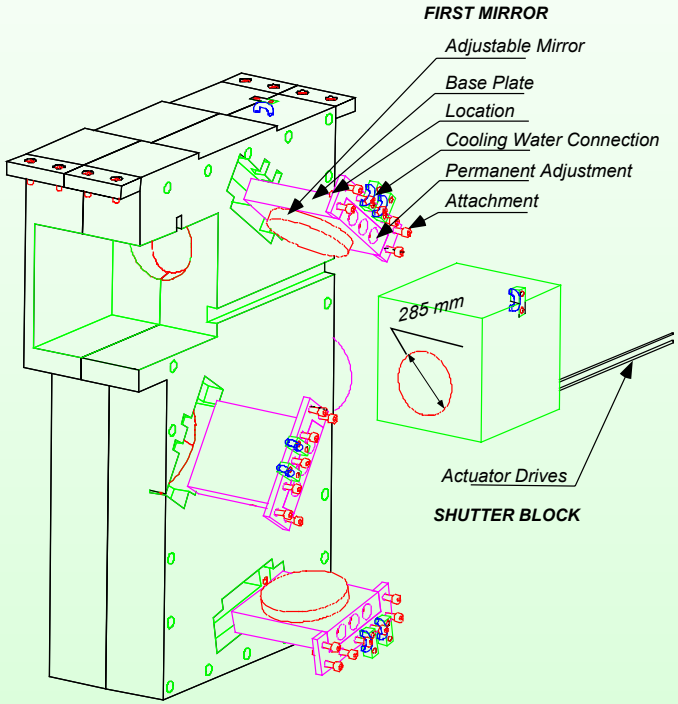

Width = 600 mm
Height = 2420 mm
Length = 1500 mm (max)
Mass = 8812 kg (80%StSt)

C.01 LIDAR
Diagnostic Block Optical Module

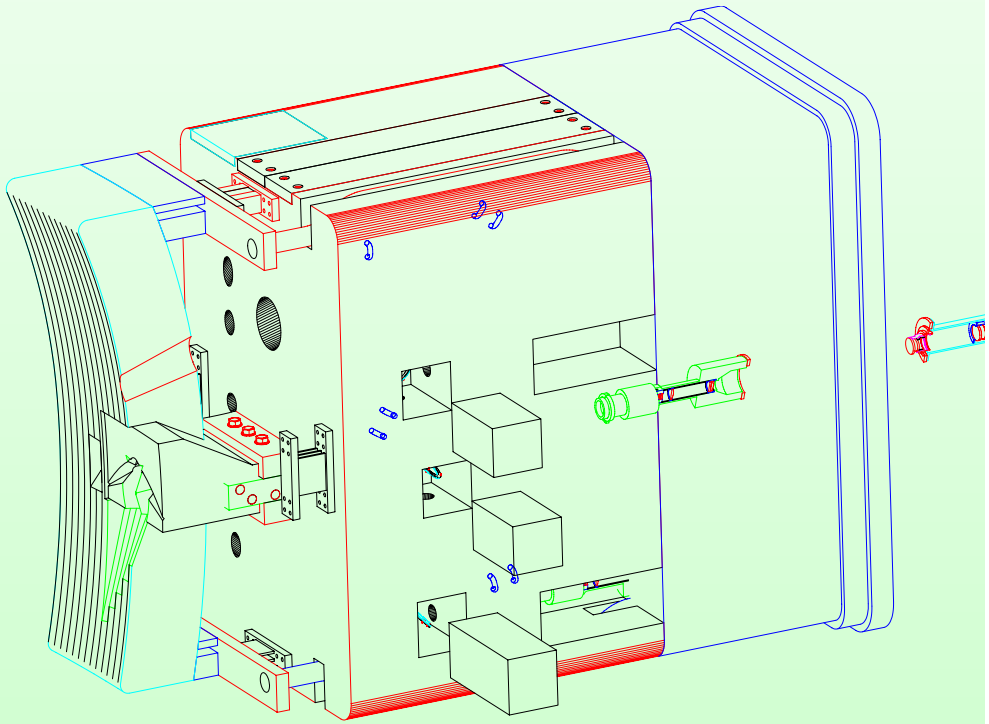

C.01/LIDAR/ Dig Bl Op Mod-5
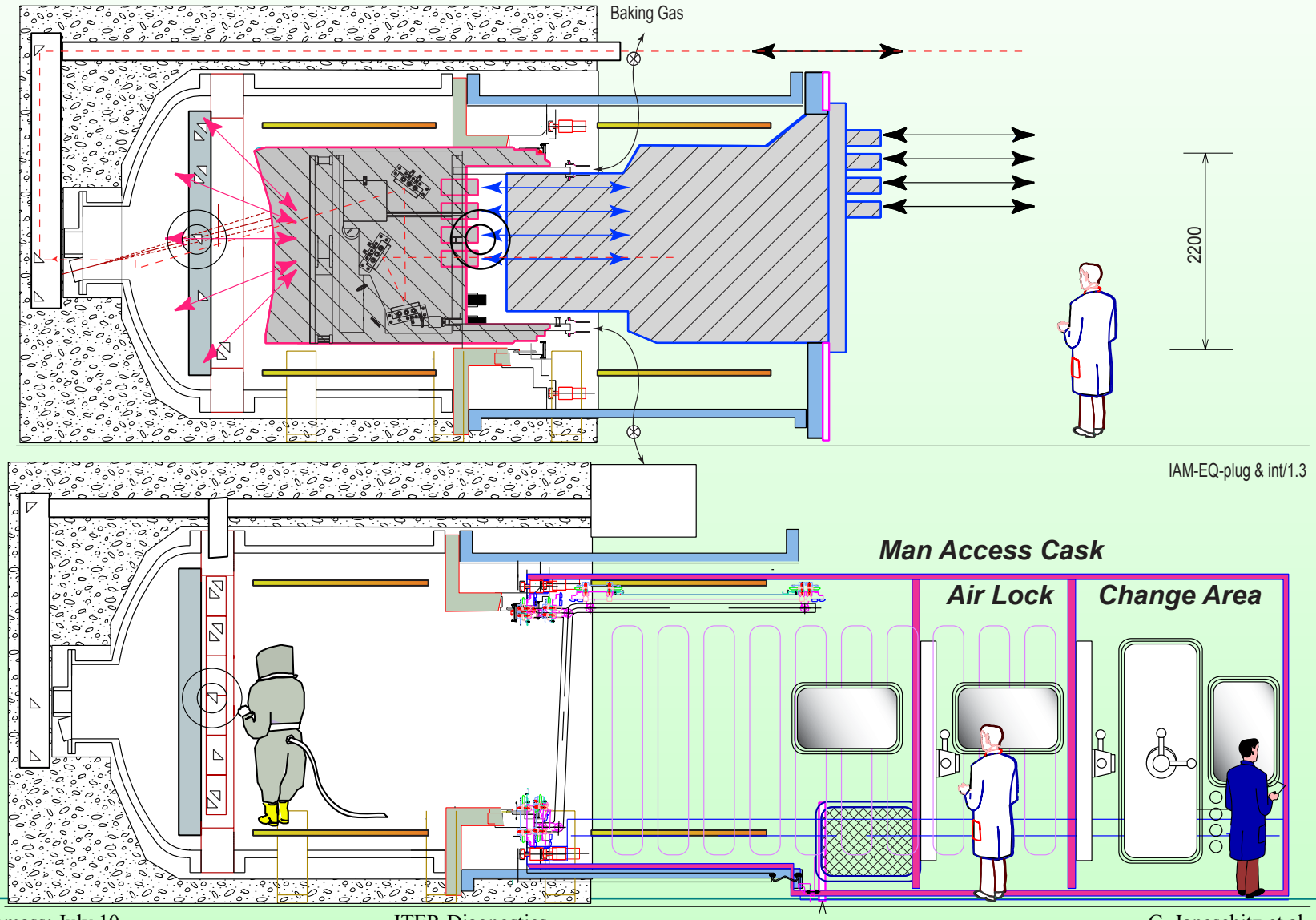
Diagnostic Test Stand in the Hot Cell