Ignitor Diagnostics

Contributions from:

R. Bartiromo, P. Batistoni, E. Bittoni, F.Bombarda, G. Bonizzoni, P. Buratti, S. Coda, B. Coppi, P. Detragiache, C. Ferro, G. Gorini, M. Haegi, J.A. Snipes, J. Källne, H. Kroegler, E. Mazzucato, M. Nassi, S. Rollet, O. Tudisco, M. Zerbini, M. Zucchetti

Snowmass, July 8-17, 2002

The Goal: Reach thermonuclear ignition $P_a = P_{loss}$ for duration that exceeds the relevant intrinsic physical time scales (~ 4 s).

The Strategy: Use compact, high field limiter configurations to reach burning and ignition conditions at low temperature (≅10 keV), high density (10^{21} m^{-3}), and trigger the thermonuclear instability.

The Mission: Investigate plasma heating, transport process and stability of fusion generated alpha-particles; identify methods for control, heating and fueling of high density burning plasmas.

Approach

- The Ignitor diagnostics requirements are considerably simpler than other BPX, given the size, the parameter range and the configuration of the experiment.
- Ignitor has taken a relatively conservative approach to diagnostics, in that established and well proven techniques are preferred over innovative concepts.
- A basic set of diagnostic systems has been selected to ensure operation and document mission success.
- For the crucial neutron diagnostics a new concept was proposed, designed and implemented on JET (MPR and TOF).

Status

- Feasibility and characteristics of basic systems have been assessed (www.frascati.enea.it/ignitor/default/engineering/Ignitor_Diagnostics.htm).
- Machine integration is proceeding for magnetics and other in-vessel components as first wall design progress.
- More systems are being analyzed and included.
- Radiation related issues for magnetics and optical fibers similar to other BPX
- No good assessment of alpha-particle diagnostics, similar to other BPX .

Diagnostic Ports

9 ⇒ 6 Horizontal ports **160×800 mm**
22 Oval vertical ports **100×35 mm**
15 Circular vertical ports **Ø 35 mm**

No manned access
⇒ Larger than FTU (80×400mm)

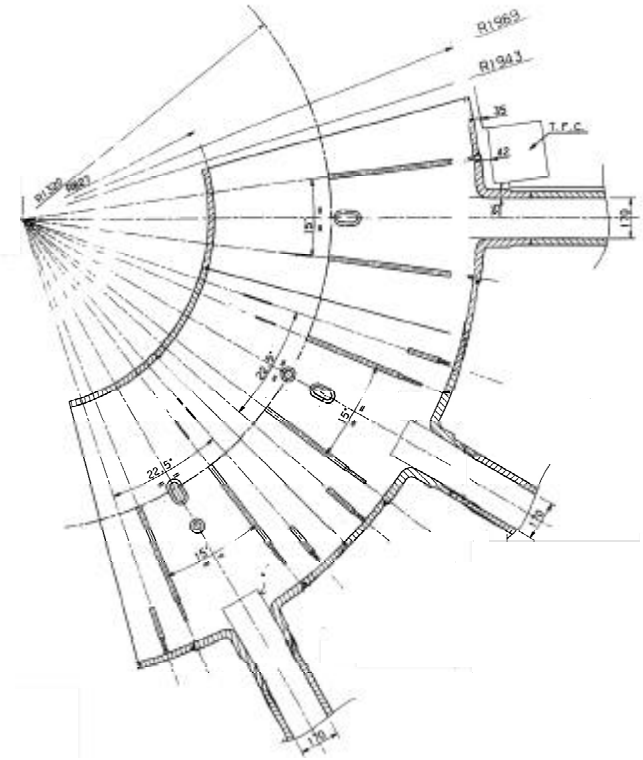

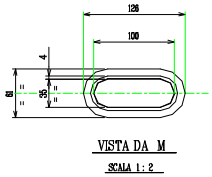

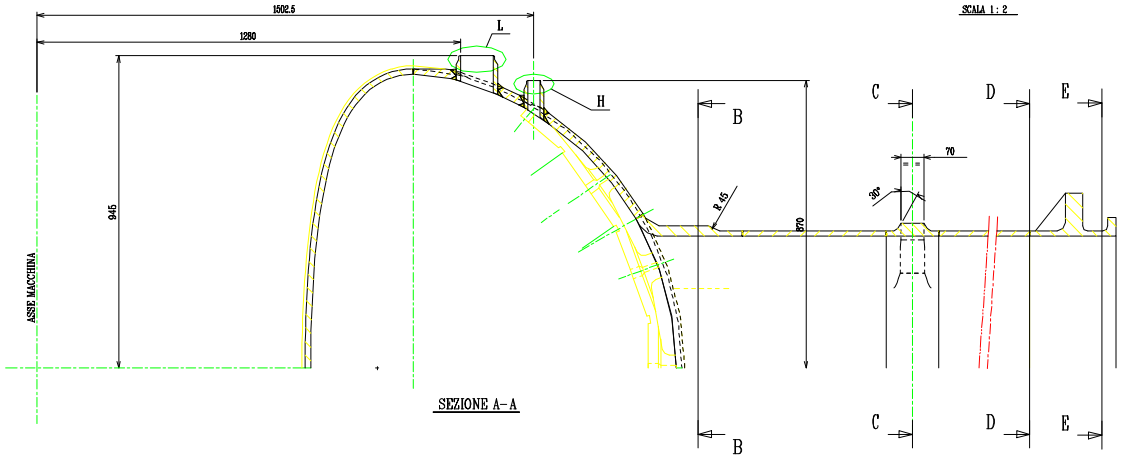

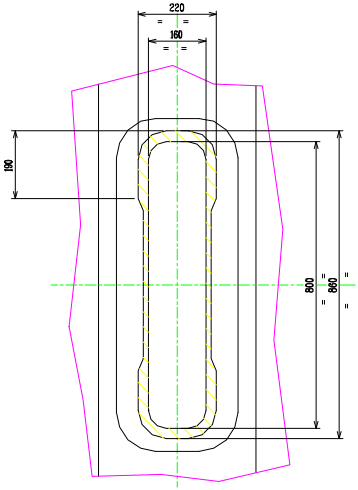

Accessibility

The limiter configuration greatly simplifies the diagnostic requirements, in two ways:

i) The vertical line-of-sights are “clean”

ii) Fewer diagnostics are needed for the edge.

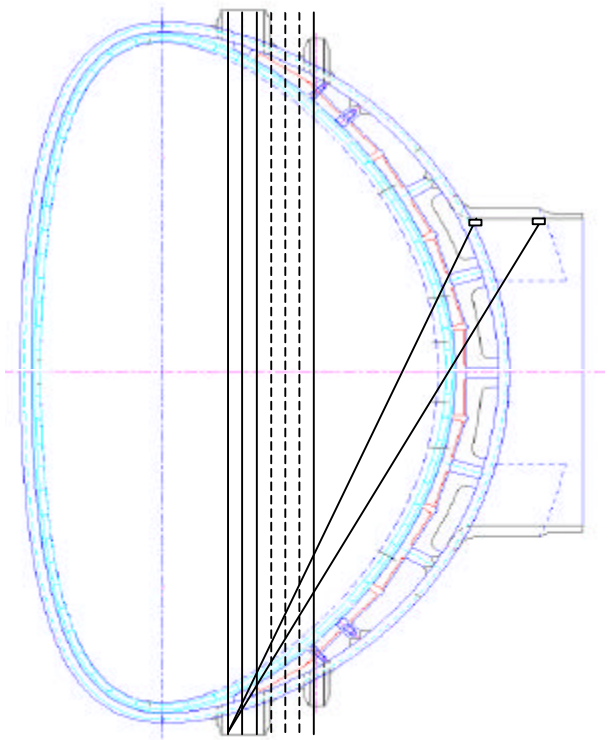

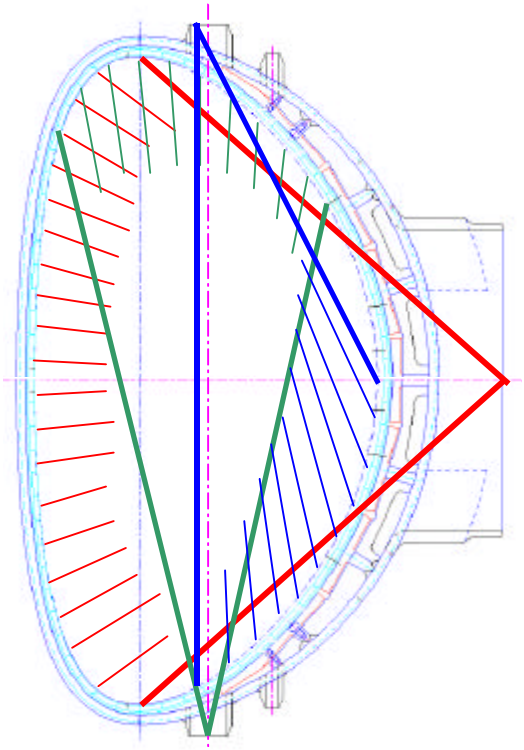

The “pockets” around the mouth of the horizontal ports are an extra bonus for housing in-vessel components

Radiation and Activation

High neutron flux, low fluence
@ FW: 10^{15} cm^{-2} s^{-1}, 3×10^{18} cm^{-2}
@ port flange: 10^{13} cm^{-2} s^{-1}, 4×10^{16} cm^{-2} (no plug)

The optimization of shielding around the machine allows hand-on access to the cryostat after reasonably short cooling times.

RH for in-vessel components is required in any case after initial machine assembly.

Contact dose rate in the cryostat at the equatorial level

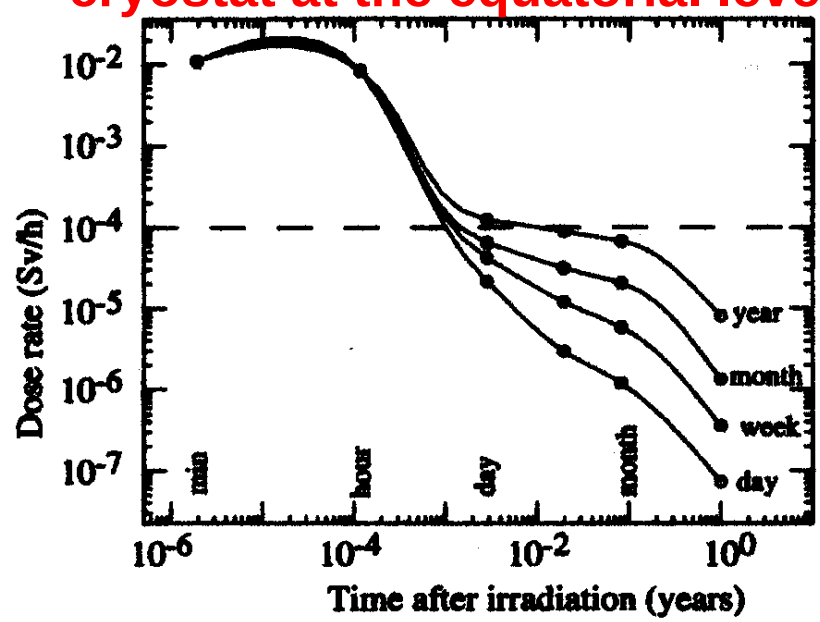

S. Rollet at al., *Fus Eng & Des* **51**, 599 (2000)

Is there life without DNB? YES

Typical parameters measured by NB-based diagnostics are:
$T_i(r)$, v_ϕ , $J(r)$, fluctuations.

These parameters can be measured in Ignitor by:
-Neutron camera: $T_i(r)$
-Curved X-ray Spectrometer (CCS): $T_i(r)$, v_ϕ, v_θ
-CO_2 Polarimeter: $J(r)$ (probably : wait for C-Mod results)

Resolution and/or spatial coverage may not be as high as the best obtained in present day experiments, but that will be hard to match with DNB anyway in a BPX.

Summary

- A basic set of diagnostics has been assessed that should provide adequate spatial and temporal resolution for fundamental parameters.
- New systems are being evaluated and included.
- Ignitor will be able to test compact systems, RH installation and maintenance for burning plasma diagnostics at similar level than other devices, except for issues related to long acquisition times.

Base-line Diagnostic Systems

Plasma Parameter	Diagnostic	Additional parameters	Δx, Δt	Tritium compat.	Instrument
Current, Voltage	MME	I_p, $V\text{-}_{loop}$	1 ms	Y	Rogowsky, External loops
Position, Shape	MMI	B_{pol}, B_T	1 ms	y?	Internal loops, Saddle loops
MHD, β	MMI		> 1μs	Y?	Pick-up coils, diamagnetic loops
E- temperature	ECE	$T\text{-}_e(r)$, MHD	3 cm, 5 ms (μs)	Y	Michelson, Polychromator
	Thomson Scattering	$T_e(r)$, $n_e(r)$			Nd
I- temperature	CCS	T_i, T_e, n_Z, v_ϕ	3 cm, 50 ms	Y	Curved Crystal Spectrometer
	Neutron Spectrometer	$T_i(r)$, n_D, n_T, $f(E_n)$	6 cm, 50 ms	Y	MPR+TOF$_d$+TOF$_p$
Density	Interferometry, Reflectometry	$n_e(r)$, ñ		Y	CO_2 interferometer, Faraday Rotation, Reflectometer
Radiated Power	Bolometry		3 cm, 1-100 ms	Y?	Metal Resistor
Impurity	Visible Spectroscopy				
Z-$_{eff}$	Visible Bremsstrahlung				
Current profile	Polarimeter				Faraday Rotation
Neutrons	Counters, Foil Activation	$Y_n(t)$			
Alpha's					

Neutron Camera

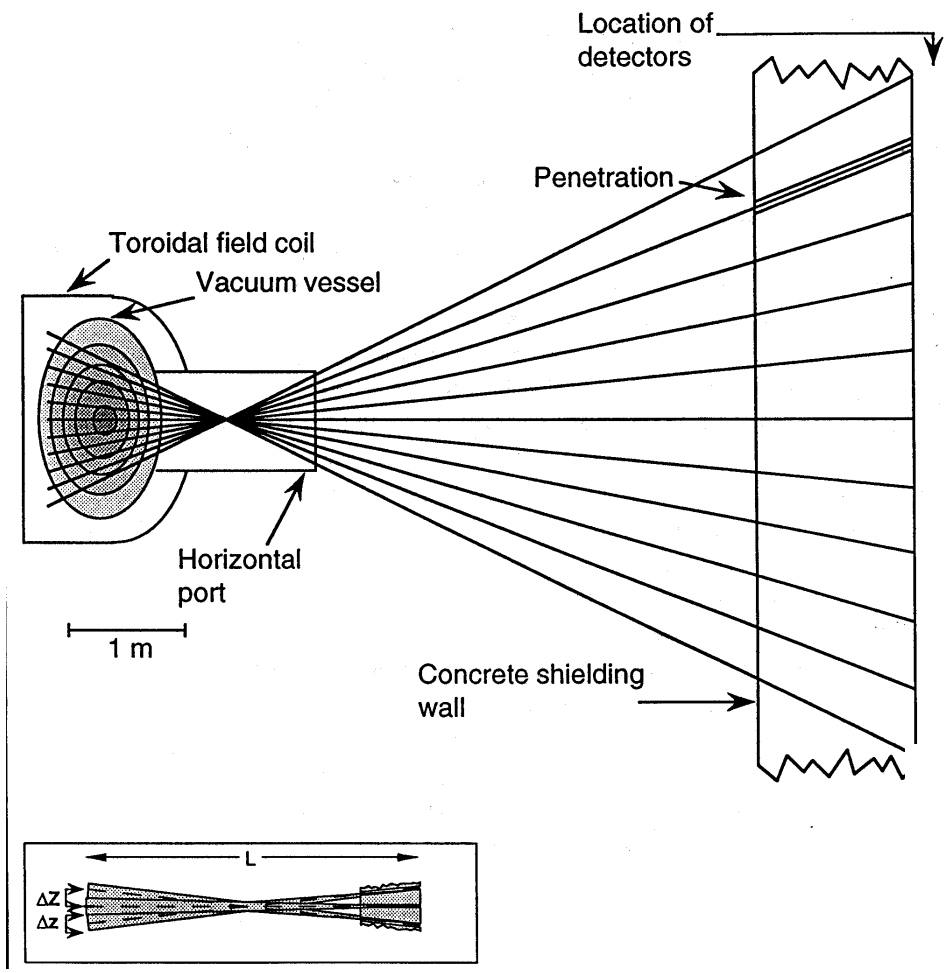

➤➤ **Neutron Emissivity Profile**

Multicollimator with Magnetic Proton Recoil Detectors (MPR) ⇒ $T_i(r)$

Possible simultaneous measure of n_D and n_T

L ~ 7.5 m
11 channels ⇒ 65% of plasma
Δz ~ 6.5 cm

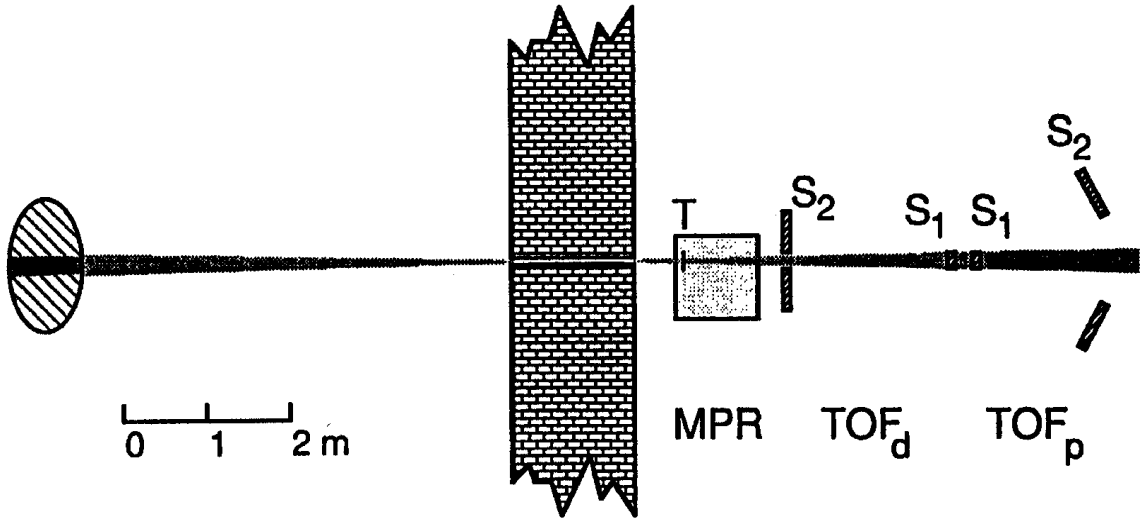

Poloidal cross section of the plasma, the bunker wall and layout of the MPR+TOF$_D$+TOF$_p$ spectrometer system.

Crystal Spectrometer

T_i from $\Delta\lambda$ Doppler of impurity lines

$T_i > 1$ keV

Trace amounts of impurities provide adequate signal levels

As a reference, Ar and Mo lines can be used to cover the temperature range 1 – 15 keV

Toroidal and poloidal rotation can be measured ($\alpha \sim 4.5°$)

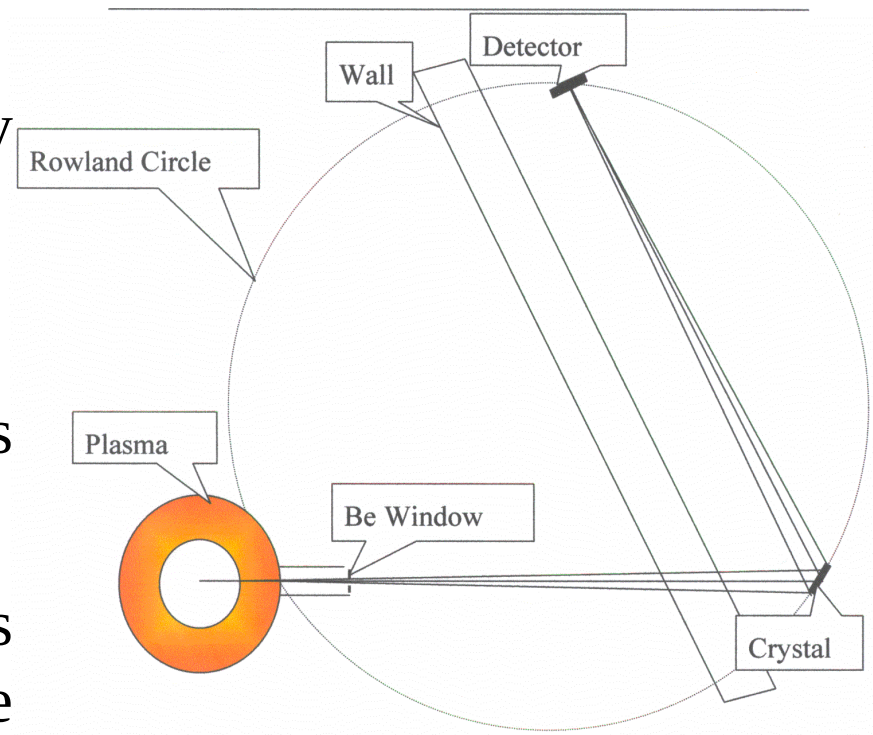

$$\frac{\Delta l_\Phi}{l} > \frac{\Delta x_D}{2R}\frac{\cot q_B}{\sin q_B}$$

$V_\phi > 30$ Km/s

$V_\theta > 3$ Km/s

Radial profiles can be measured with a lay-out similar to that on FTU [1], possibly using multiple 2-D detectors.
MWPCs are well tested, can be large, and can work in 2-D.
Gamma and neutron-induced background can be discriminated .

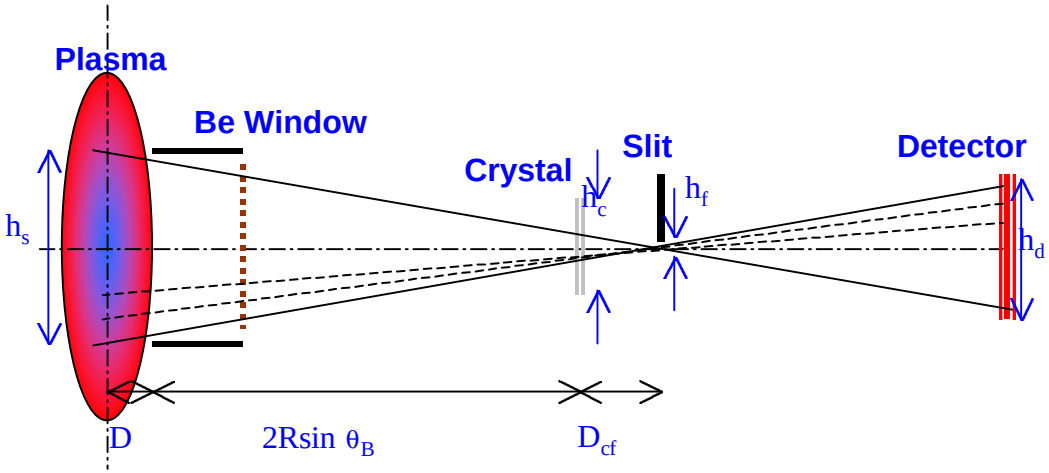

Detector effective area:
100×100 mm → 160×100 mm
Detection gas:
75% Ar (or Xe)– 25% Ethane
Resolution in x-direction:
<0.4 mm
Resolution in y-direction:
5-20 mm (programmable)
(~3 cm on plasma)
Counting Rate: ~500 KHz

[1]R. Bartiromo, et al., ISPP-9, 959 (1991)

ECE

In low aspect ratio toroidal devices, the spatial extent of temperature profiles that can be obtained from ECE is conditioned by overlap between different harmonics. For full-bore discharges with $R0$=1.32 m and a=0.47 m, harmonic overlap is totally absent in the following ranges:

fundamental harmonic: $R0 - 0.42 < R < R0 + a$

second harmonic: $R0 - 0.12 < R < R0 + 0.37$

114 - 568 GHz for $B0$=5.5-13 T, 228 - 1136 GHz.

Michelson : 5 ms, 3 cm

Multiple Grating Polychromator: 1 MHz

Heterodyne Radiometers

A scheme that provides both good spatial resolution and alignment reliability has been developed for the FTU tokamak [1] and can be applied to Ignitor to obtain a spatial resolution of 3 cm in all directions and a light throughput suitable for detector-limited performance.

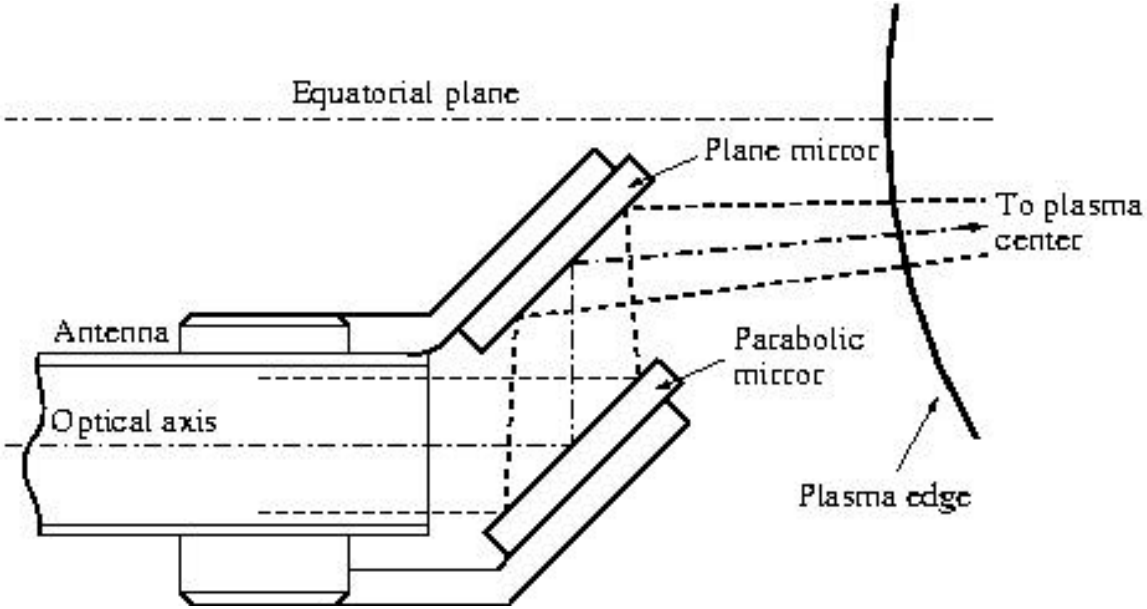

Front end of light collection systems. The parabolic mirror focuses the antenna aperture at the plasma center

[1] P. Buratti, O. Tudisco and M. Zerbini, *Infrared Phys.* **34**, 533 (1993).

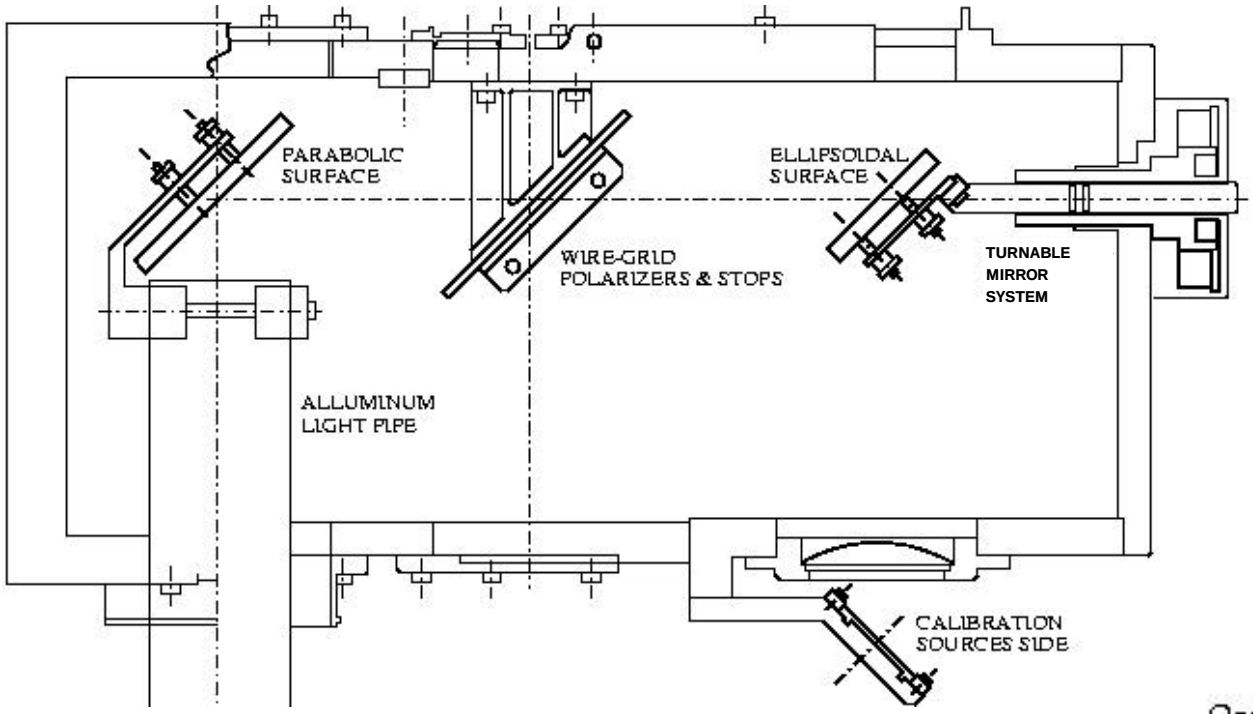

Optics box placed outside the vacuum window. The aluminum light pipe carries collected radiation to the spectrometers placed outside the torus hall. The turnable mirror switches from plasma to calibration sources

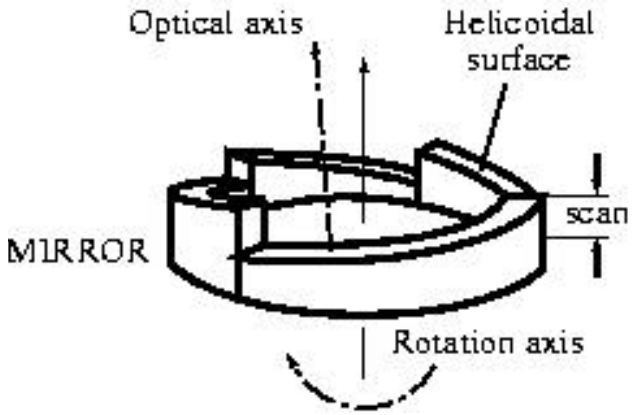

Magnetics

- All the electromagnetic diagnostics commonly used in present experiments can also be adopted in Ignitor.
- The moderate neutron fluence but very intense neutron flux expected in Ignitor demand the use of fully inorganic insulating materials.
- More data is needed to estimate prompt radiation effects on the selected materials (MACOR).
- While the initial positioning of the in-vessel components should be possible with relative ease (before the welding of the individual sectors), their replacement and maintenance in the course of the experimental life of the machine would be problematic, and impossible for all the ex-vessel components. Therefore, an adequate level of redundancy is being considered.

In-vessel magnetic sensors:
in the shade of FW tiles

B_{pol}

B_{tor}

Saddle coils

Rogowsky

Diamagn. loops

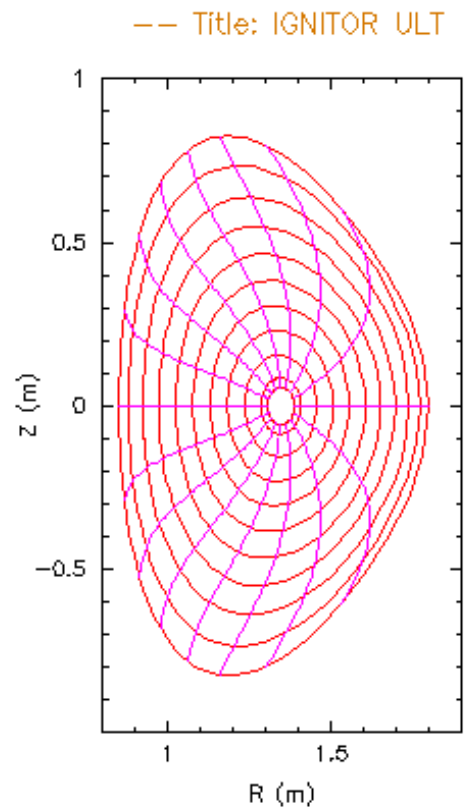

Poloidal angles equally spaced in Boozer coordinates.

Density

Three methods for the measurement of the plasma density in Ignitor can be adopted: a Two Color CO_2 Interferometer, a densitometer based on Faraday rotation and Microwave Reflectrometry

Faraday Rotation measurements on the equatorial plane can complement the CO_2 data.

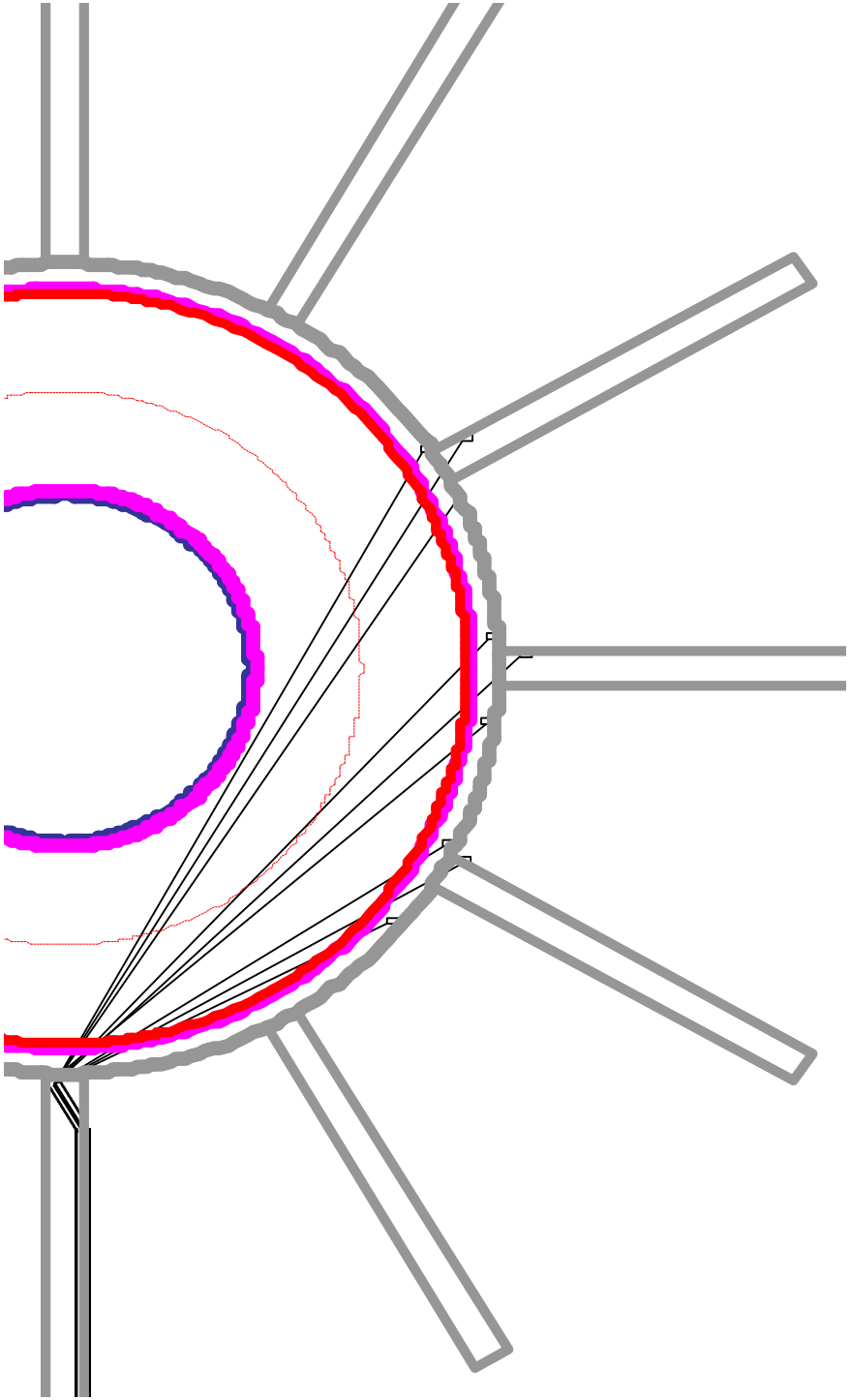

CO_2 Interferometer and Polarimeter

Two Color Interferometer can measure the density in the central part of the plasma column, with a few side views. The same optics may be shared by a polarimeter for measurement of plasma current profile [1].

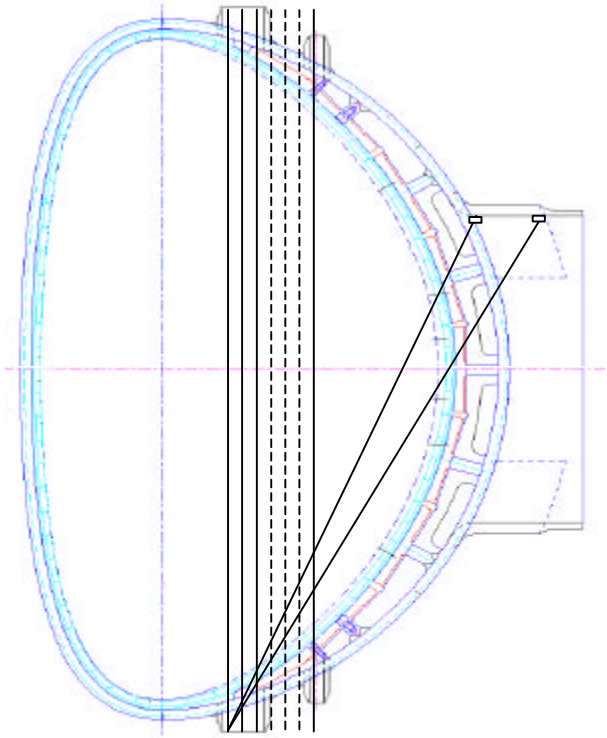

This system has been tested on C-Mod. An upgraded version will soon be operational, which should resolve the initial problems.

[1] C.H. Ma, et al., *Rev. Sci. Instrum.* **66** 376 (1995).