Snowmass - Experimental Approach - Diagnostics (E1)

Not for distribution without direct approval

- Conveners: **R.Boivin, R. Fonck**
- Resource contacts: **K. Young (FIRE)**
  F. Bombarda (Ignitor)
  A. Costley (ITER)
- Group members:
  - **R. Giannella (CEA Cadarache)**
  - **D. Johnson (PPPL)**
  - **Y. Kusama (JAERI)**
  - **G. McKee (University of Wisconsin)**
  - **T. Peebles (UCLA)**
  - **J. Sanchez (CIEMAT)**
  - **S. Sudo (NIFS)**
  - **J. Terry (MIT)**
  - **C. Watts (New Mexico Tech)**
  - **G. Wurden (LANL)**

Format:
10 min: Introduction
5 min: floor

5 min Ignitor
+ 5 min F. Bombarda
15 minutes floor

5 min FIRE
+ 5 min K. Young
15 minutes floor

5 min ITER
+ 5 min G. Janeschitz
15 minutes floor

Highlights of the HTPD-Diagnostics Meeting (Madison)

- More than 290 participants (IFE and MFE) attended the meeting last week in Madison, Wisconsin (largest attendance ever!)
- First time where foreign participation largely exceeded US participation, at least on the MFE side
  - Change not due to Snowmass attendance
  - US lead in diagnostic development has eroded dramatically
- Also noted: very few BPX diagnostic presentations (~ 10)
- Only 6 fast ion and alpha particle diagnostic papers!

Highlights of the HTPD- Diagnostics Meeting (Madison) - cont'd

- This presentation was shown to the community last Monday night, and was well attended
- Additional input was gathered from the diagnostic community

Highlights of the HTPD- Diagnostics Meeting (Madison) - cont'd

- … Finally, if the organizers are planning a follow-up Snowmass meeting, we are making first claim for a time-slot in Spring 2004 for the next diagnostic meeting!!!

The success and the enduring contribution of a BPX reside in large part in the ability to properly measure the plasma properties, which will define the knowledge to be obtained from the undertaking.

Does it appear from the plans for diagnostics that:

- they can support the mission of the experiment by providing necessary measurement capability?
- the physics requirements are sufficiently well defined and justified, for setting the measurement requirements and associated diagnostic techniques?
- the set is sufficiently flexible and redundant to optimize physics information and to allow an objective assertion of the device performance?
- they are scheduled for installation and commissioning in a timely fashion in order to support the physics program appropriately?
- the systems are consistent with measurement capability, including but not limited to sufficient resolution and coverage, and an ability to maintain proper calibration?
- they are consistent with the availability and survivability of these diagnostics in the expected environment?

Needs and Benefits

- Are there areas of research and development necessary for achieving measurement requirements?
- Are there opportunities for new measurements/techniques, and unique challenges for diagnostics?
- Is there direct benefit to diagnostics associated with a BPX?
- How do diagnostics developed for a BPX benefit the ICC program?

Philosophy

- Three important aspects are required in diagnostics in order to obtain good science and for pursuit of mission success
  - Quality (accurate and calibrated systems)
  - Reliability (survivability and stability)
  - Completeness (parameter, resolution and coverage [spatial,temporal,k])
- All in the context of their mission
- Increasingly important distinction between physics evaluation and control (including machine protection)
  - Importance of (plasma) measurement raised to a new level.
  - AT complexity versus need for simplicity
- Neutron environment drastically changes design, planning and installation schedule

What are the Approaches for diagnostic design?

- Need for measurement requirements
- Need for justification of those requirements
  - Control, physics evaluation
- What is the approach employed for diagnostic set design?
  - Establish requirements versus more conventional approach
  - Is diagnostic implementation integrated with research program?
- Planning integrated or conventional after-thoughts?
- Radiation environment constraints
  - Interfacing
  - Reliability
  - Shielding

How was the assessment done

- Recognize the very different levels of design activities
  - ITER: relatively large effort over many years (many ppy, ~100)
    - Many individual systems have detailed designs
    - Well developed logic of implementation
  - FIRE: very small effort so far (fraction of ppy)
    - No detailed designs
  - Ignitor: efforts limited to a few systems, conceptual work (#ppy?)
    - No detailed designs
- Working group did not evaluate individual systems
  - No verification of individual system feasibility
  - No verification of possible integration
- Concentrated on the identification of limiting factors (generic issues)

How was the assessment done - cont'd

- Table (grid) has been generated based on data available for each option regarding:
  - Requirements and justification
  - Schedule and implementation
  - Access
  - Environment (neutron flux)
  - Reliability (calibration)
  - Flexibility and redundancy
  - Diagnostic set description
  - R&D needs
  - Benefits and opportunities
- Available in appendix of full report

What are the limitations on diagnostic implementation?

(Generic issues)

- Access
  - Is there a lower limit in machine dimension (BPX) for which its corresponding diagnostic set can no longer support the mission?
- Radiation environment
  - Neutron flux is a more serious issue than fluence
- Beam-based diagnostics
- Erosion/deposition environment
- Cost

Contributions to ICC

- A well diagnosed BPX contributes directly to the success of any ICC-based BPX
- Benefits in the diagnostics area from each option (described next) will help directly any future ICC-based BPX.

Summary

Not for distribution without direct approval

- The sense is that, overall we are ready to proceed with next step at the diagnostics level, PROVIDED that
  - R&D is pursued aggressively on remaining issues and systems, which are not presently believed to meet requirements.
    - Added BPX specific issues such as environmental issues (e.g. neutron and coatings)
- Presently, there are no convincing alpha diagnostic techniques for any BPX.

IGNITOR

To obtain thermonuclear ignition

- Use compact, high field limiter configurations to reach burning and ignition conditions at low temperature, high density, and trigger the thermonuclear instability.
- Investigate plasma heating, transport process and stability of fusion generated alpha-particles
- Identify methods for control, heating and fueling of high density burning plasmas

Ignitor

Not for distribution without direct approval

- Overall assessment: Proposed set is presently not sufficiently defined for full evaluation
- With information on hand, found that the diagnostic set
  - Should be able to support ignition mission
  - Serious concerns remain for physics evaluation and for burn control
  - Additional engineering design may answer those concerns

Ignitor - details

- Measurement requirements and justification NOT defined
- No implementation schedule (timeline) as of yet
- Some high priority R&D items are identified
  - Radiation effects (on fiber optics, bolometers, etc)
  - q profile measurement
  - Alpha particle diagnostics
- Machine mostly designed before diagnostic design

Ignitor-details - cont'd

- Lack of access is severe
  - Restricted field of view (limited solid angle)
  - No manned access EVER possible (ports too small)
  - As in any BPX, must include shielding, labyrinths and double seals
- Diagnostic design has NOT yet been integrated with device to determine credible functionality (e.g. sightlines) for individual systems
- Neutron environment is an issue (as in any BPX)
  - Magnetics sensors are in a high flux region (no shielding/blanket to reduce neutron flux)
  - Needs additional design and R&D
- No NB planned. Alternative techniques for profile measurements have many issues

Ignitor - port access

- Some shielding must be included
- 6 midplane ports for diagnostics
- 9 circular (35mm diameter) and 12 oblong up/down small vertical ports available

Midplane port

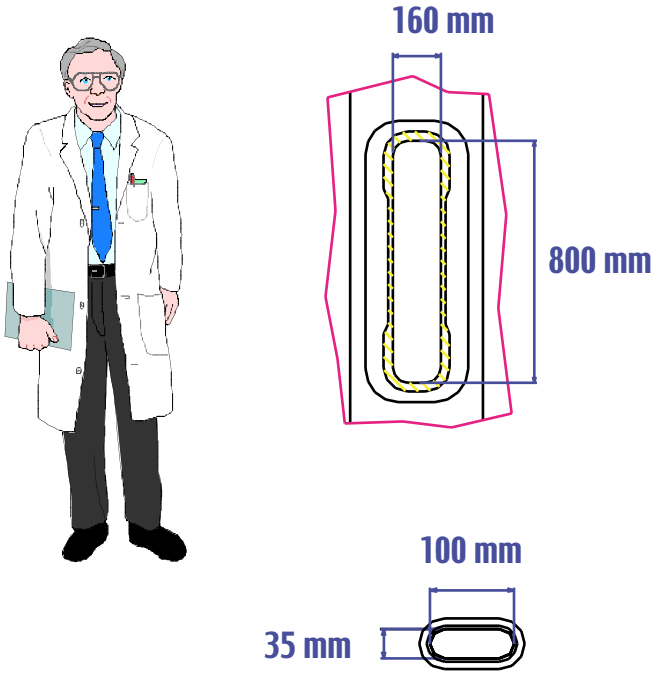

Vertical port

IGNITOR PLASMA CHAMBER

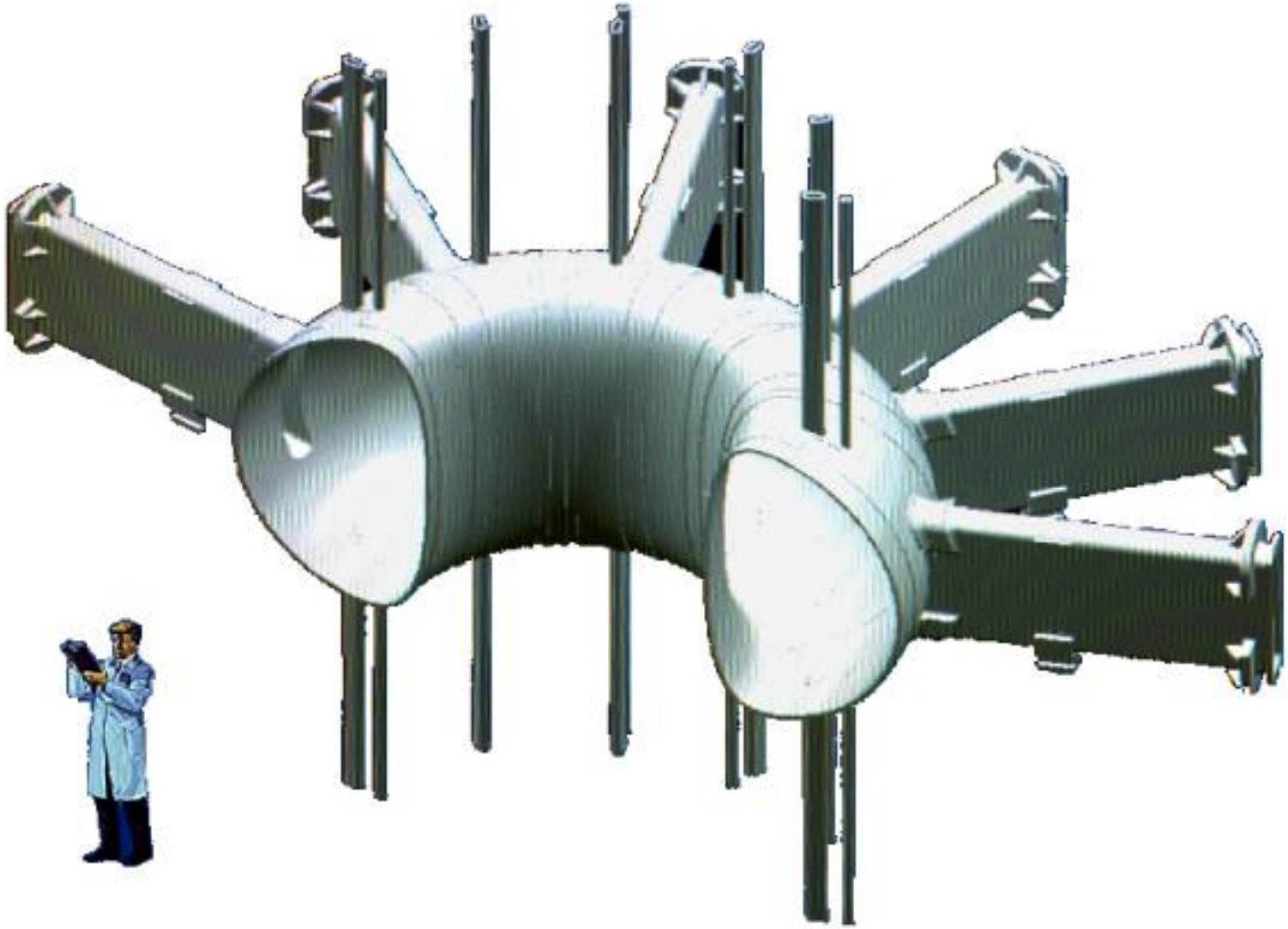

Plasma chamber view

Ignitor-benefits

- All α-particle and neutron diagnostics will benefit from the large signals during the DT phase.
- This experiment will promote the development of compact, reliable systems able to operate in a harsh environment, and adapted to remote handling procedures.
- Experience in fielding diagnostic systems under reactor-like radiation fluxes (but not fluence).
- Contributes to any BPX (ICC and others)

FIRE

To attain, explore, understand and optimize magnetically-confined fusion-dominated plasmas.

- Explore and understand the strong non-linear coupling that is fundamental to fusion-dominated plasma behavior (self-organization)
  - Energy and particle transport
  - Macroscopic stability
  - Wave-particle interactions
  - Plasma boundary
  - Test/Develop techniques to control and optimize fusion-dominated plasmas.
  - Sustain fusion-dominated plasmas
  - Explore and understand various advanced operating modes and configurations in fusion-dominated plasmas

FIRE

Not for distribution without direct approval

- Overall assessment: Proposed set is plausible, should be able to support the mission
- Significant open issues
  - DNB (MSE and CXRS)
  - Prompt radiation effects for components inside the vacuum vessel
  - Diagnostic coverage for 2 divertors
  - Full engineering study might raise additional issues and clarify others.
  - R&D required on those open issues.

FIRE - details

- Measurement requirements and justification well defined (largely benefited from ITER work)
- Draft of implementation schedule
- Some high priority R&D items are identified
- In this pre-conceptual phase, the diagnostic integration has not been yet initiated, tokamak mostly designed before diagnostic design input
- Diagnostic design has NOT yet been integrated with device to determine credible sightlines for individual systems

FIRE-details - cont'd

- Access is good, many ports
  - 2 divertors to diagnose, additional challenge
  - Must include shielding and labyrinths
- Neutron environment is an issue
  - Magnetics sensors are in a high flux region (no shielding/blanket to reduce neutron flux)
  - Use ITER- developed mitigating techniques
  - Needs additional design and R&D
- Beam based diagnostics is a major issue, requires a renewed and strong national R&D program (beam)
- Erosion and deposition could jeopardize some optical systems calibration and survivability.

FIRE -port access

- ~10 midplane, ~8 upper, ~8 lower ports for diagnostics

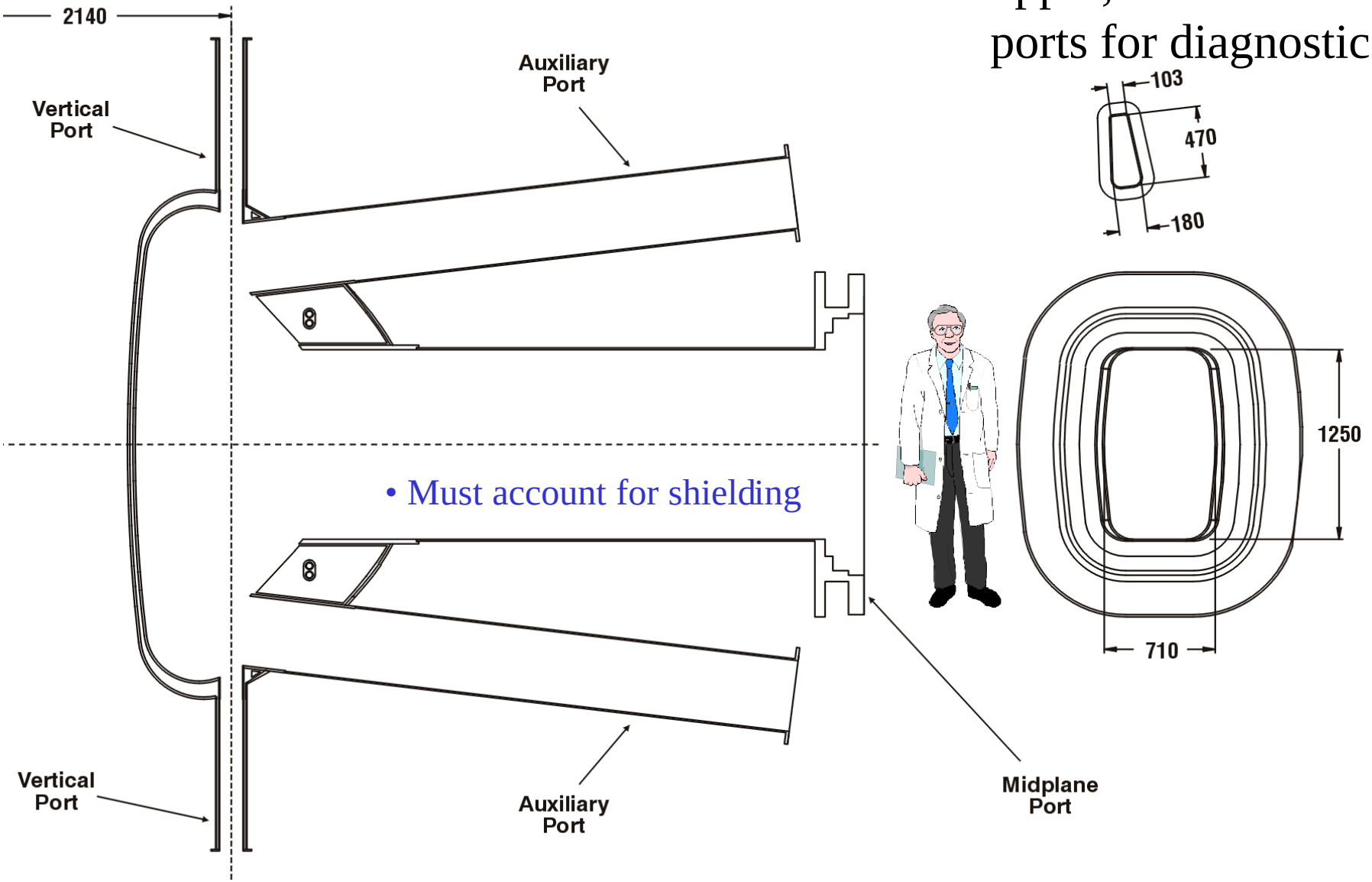

- Must account for shielding

FIRE-benefits

- Use of plasma diagnostics for very detailed control of the plasma performance will be a very important benefit.
- Demonstration of diagnostics for measuring core isotopic density and α-particle behavior will be achieved.
- Fusion product diagnostics (neutrons and alphas) will benefit from the large signals during the DT phase.
- Experience in very tight standards for reliability, and novel calibration and maintenance techniques.
- Demonstration of real time feedback on critical spatial gradients with profile diagnostics of sufficient S/N and reliability.
- Demonstration of the effectiveness of diagnostics to operate in harsh radiation and neutral particle environment. (flux but not fluence)
- Contributes to any BPX (ICC and others)

ITER

To demonstrate the scientific and technological feasibility of fusion energy for peaceful purposes.

- Plasma Performance
  - achieve extended burn in inductively driven plasmas with the ratio of fusion power to auxiliary heating power of at least 10, for a range of operating scenarios
  - with duration sufficient to achieve stationary conditions on the time scales characteristic of plasma processes.
  - aim at demonstrating steady-state operation using non-inductive current drive with the ratio of fusion to current drive power of at least 5
  - the possibility of controlled ignition should not be precluded

- Technology
  - demonstration of integrated operation of technologies essential for a fusion reactor
  - testing of key components for a fusion reactor
  - testing of concepts for a tritium breeding module

ITER

Not for distribution without direct approval

- Overall assessment: Proposed set is credible, should be able to support the mission (scientific and technological)

ITER-details

- Measurement requirements and justification well defined->
- Credible time implementation
- Detailed designs exist for many diagnostics (including S/N assessments), preliminary designs for most others.
- High priority R&D items are identified
  - ITPA-diagnostics priority list and tasks
- Diagnostic design has been integral part of machine design, in part due to the ITER-98 -> FEAT transition
- Well-developed implementation logic with priority:
  - Machine protection
  - Performance control
  - Physics evaluation

Example of Measurement Requirements

Plasma Position and Shape

Specification for the plasma current measurement:-

MEASUREMENT	PARAMETER	CONDITION	RANGE or COVERAGE	RESOLUTION		ACCURACY
				Time or Freq.	Spatial or Wave No.	
2. Plasma Position and Shape	Main plasma gaps, Δ_{sep}	I_p > 2 MA, full bore	-	10 ms	-	1 cm
		I_p Quench	-	10 ms	-	2 cm
	Divertor channel location (r dir.)	Default	-	10 ms	-	1 cm
		I_p Quench	-	10 ms	-	2 cm
	dZ/dt of current centroid	Default	0 – 5 m/s	1 ms	-	0.05 m/s (noise) + TBD % (absolute)

Principal diagnostic: Magnetics

ASSESSMENT OF MEASUREMENT CAPABILITY

GROUP 1a Measurements For Machine Protection and Basic Control	GROUP 1b Measurements for Advanced Control	GROUP 2 Additional Measurements for Performance Eval. and Physics
Plasma shape and position, separatrix- wall gaps, gap between separatrixes	Neutron and α-source profile	Confined α-particles
Plasma current, q(a), q(95%)	Helium density profile (core)	TAE Modes, fishbones
Loop voltage	Plasma rot. (tor and pol)	T_e profile (edge)
Fusion power	Current density profile (q-profile)	n_e, T_e profiles (X-point)
$\beta_N = \beta_{tor}(aB/I)$	Electron temperature profile (core)	T_i in divertor
Line-averaged electron density	Electron den profile (core and edge)	Plasma flow (divertor)
Impurity and D,T influx (divertor, & main plasma)	Ion temperature profile (core)	$n_T/n_D/n_H$ (edge)
Surface temp. (div. & upper plates)	Radiation power profile (core, X-point & divertor)	$n_T/n_D/n_H$ (divertor)
Surface temperature (first wall)	Z_{eff} profile	T_e fluctuations
Runaway electrons	Helium density (divertor)	n_e fluctuations
'Halo' currents	Heat deposition profile (divertor)	Radial electric field and field fluctuations
Radiated power (main pla, X-pt & div).	Ionization front position in divertor	Edge turbulence
Divertor detachment indicator (J_{sat}, n_e, T_e at divertor plate)	Impurity density profiles	MHD activity in plasma core
Disruption precursors (locked modes,m=2)	Neutral density between plasma and first wall	
H/L mode indicator	n_e of divertor plasma	
Z_{eff} (line-averaged)	T_e of divertor plasma	
n_T/n_D in plasma core	Alpha-particle loss	
ELMs	Low m/n MHD activity	
Gas pressure (divertor & duct)	Sawteeth	
Gas composition (divertor & duct)	Net erosion (divertor plate)	
Dust	Neutron fluence	

Expect to meet meas. reqs; maybe/mabe not; expect not to meet meas reqs.

ITER-details - cont'd

- Access is large (accommodates shielding and labyrinths)
- Diagnostic design has been integrated with device to determine credible functionality(e.g. sightlines) for many individual systems
- Neutron environment is an issue
  - Identified mitigating solutions
  - Good R&D program carried out and continuing
- Beam based diagnostics have remaining issues but are being addressed
- Erosion and deposition could jeopardize some optical systems calibration and survivability.

ITER -port access

- ~5 midplane, 11 upper and 14 lower ports for diagnostics
- Space must include shielding and labyrinths

ITER midplane port

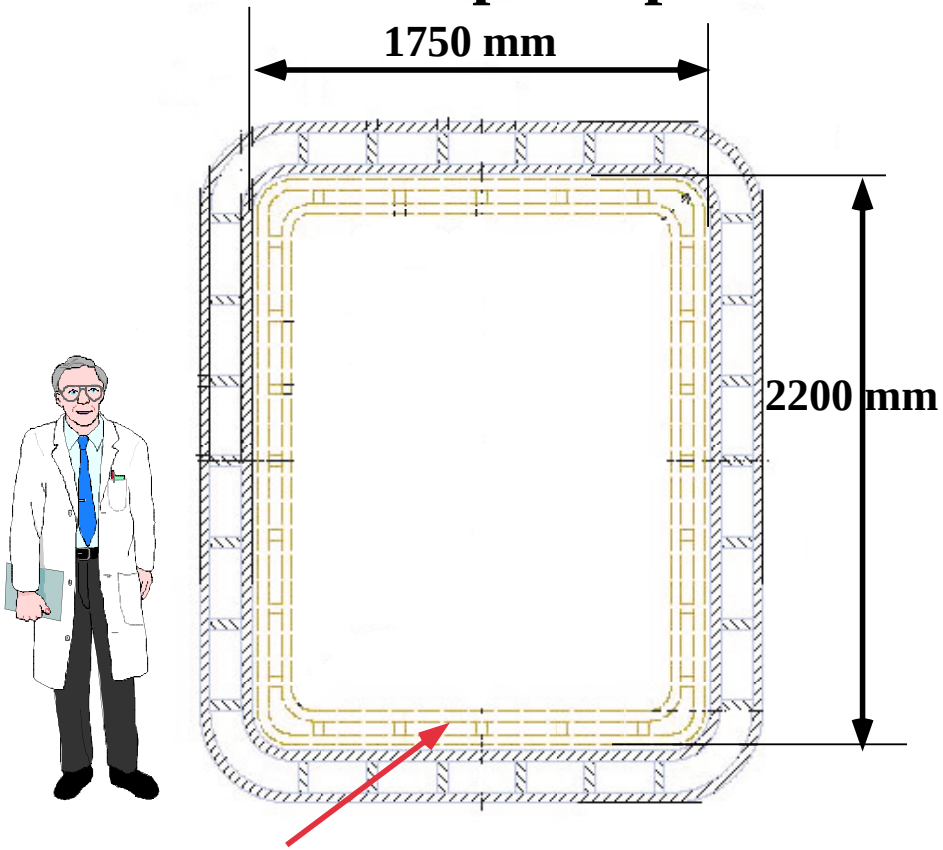

Plug is 150 mm thick all around

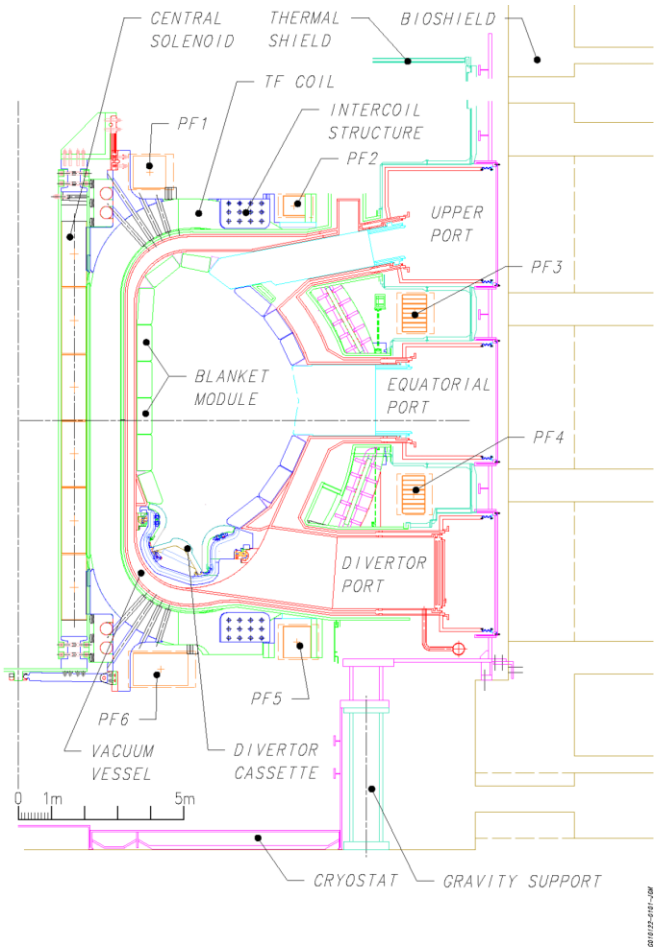

Tokamak Poloidal Cross-Section

Equatorial port #11

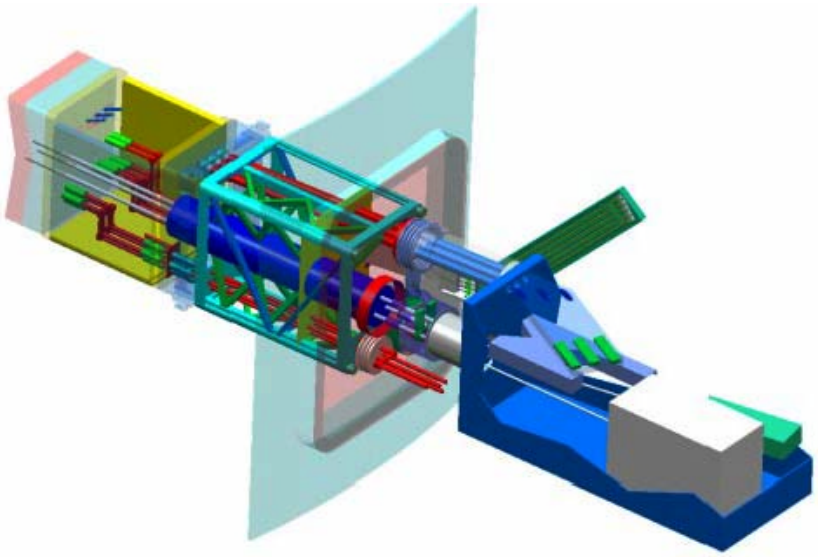

Example of diagnostic integration

- X-Ray crystal spectroscopy
- VUV spectroscopy
- NPA
- Reflectometry

ITER- direct benefits

- Use of plasma diagnostics for very detailed control of the plasma performance will be a very important benefit.
- Full demonstration of diagnostics for measuring core isotopic density and α-particle behavior will be achieved.
- Fusion product diagnostics (neutrons and alphas) will benefit from the large signals during the DT phase.
- Experience in very tight standards for reliability, and novel calibration and maintenance techniques.
- Demonstration of real time feedback on critical spatial gradients with profile diagnostics of sufficient S/N and reliability.
- Demonstration of the effectiveness of diagnostics to operate in harsh radiation and neutral particle environment.
- The definition of the set of diagnostics needed for a demo-reactor will be achieved and relevant experience obtained.
- Contributes to any BPX (ICC and others)