Liquid Lithium Wall Experiments in CDX-U*

R. Kaita,[a] R. Majeski,[a] P. Efthimion,[a] c. Jones,[a] H. Kugel [a]
J. Menard,[a] T. Munsat,[a] A. Post-Zwicker,[a] A. Rosenberg,[a]
J. Spaleta,[a] G. Taylor,[a] M. Finkenthal,[b] M. Iovea,[b]
V. Soukhanovskii,[b] D. Stutman,[b] R. Conn,[c] S. Luckhardt,[c]
R. Doerner,[c] D. Hoffman,[d] and T. Miller[e]

[a]Princeton Plasma Physics Laboratory, [b]Johns Hopkins University,
[c]University of California at San Diego, [d]Drexel University,
[e]University of Massachusetts at Lowell

41st Annual Meeting of the APS Division of Plasma Physics
Seattle, WA, November 15 - 19, 1999
*Work supported by US DOE contract #DE-AC02-76-CH03073

Abstract

The concept of a flowing lithium first wall may lead to a significant advance in fusion reactor design, since it could virtually eliminate the concerns with power density and erosion, tritium retention, and cooling associated with solid walls. Sputtering and erosion tests are currently underway in the PISCES device at UCSD. To complement this effort, plasma interaction questions in a toroidal plasma geometry will be addressed by a proposed new experiment in the Current Drive eXperiment – Upgrade (CDX-U) spherical torus (ST). The CDX-U plasma is intensely heated and well diagnosed, and an extensive liquid lithium plasma-facing surface will be used for the first time with a toroidal plasma. Since CDX-U is a modest ST, much smaller quantities of lithium are required to produce a full toroidal single-null liquid lithium divertor target than in large aspect ratio devices at comparable power densities. Lithium target designs and implementation plans for CDX-U will be presented.

Motivation for liquid wall experiments in a toroidal plasma facility

- ALPS/APEX studies have identified liquid walls as a potentially "revolutionary" solution of generic MFE first-wall problems such as:
  - Heat load limits of dry walls
  - Neutron damage and activation
  - Reliability/maintainability of first wall
  - Tritium inventory and breeding

From Snowmass Chamber Science and Technology Working Group Draft:
It is necessary to conduct whole-device tests where liquid divertors and/or walls comprise a significant portion of the active surface area.

CDX-U is ideal for testing large area liquid lithium targets

- Liquid lithium targets can be installed quickly
  - uses existing CDX-U facility with minor hardware changes
  - Existing RF systems can create high local heat flux (8 - 10 MW/m^2)
  - first results expected within one year from start of program
- Extensive diagnostics can provide detailed benchmarks for modeling
  - quantitative evaluation of lithium content from spectroscopy
  - magnetic diagnostics to evaluate interactions with startup and MHD
  - 2-D visible/IRTV imaging of lithium surface with fast cameras
- PPPL can do these experiments in a well controlled and safe manner
  - Experienced with lithium in similar quantities for TFTR (≈1 liter)
  - Hardware-upgraded CDX-U has an extremely good safety system

Interaction of liquid lithium and spherical torus plasmas can be studied in CDX-U

- R_0 = 34 cm
- a = 22 cm
- $A \equiv R_0/a \geq 1.5$
- $\kappa \leq 2$
- $\delta > 0.2$
- $B_t \leq 0.5$ Tesla (~0.5 sec)
  - CW fields at 1 kG
- Ohmic $I_p \leq 150$ kA
- $P_{auxilliary} \leq 200$ kW (rf)
- "Flat-top": 20-50 msec

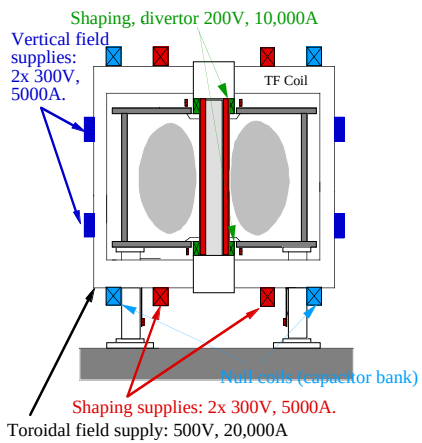

All programmable 12ϕ power supplies (18 MW).

CDX-U has an extensive set of diagnostics

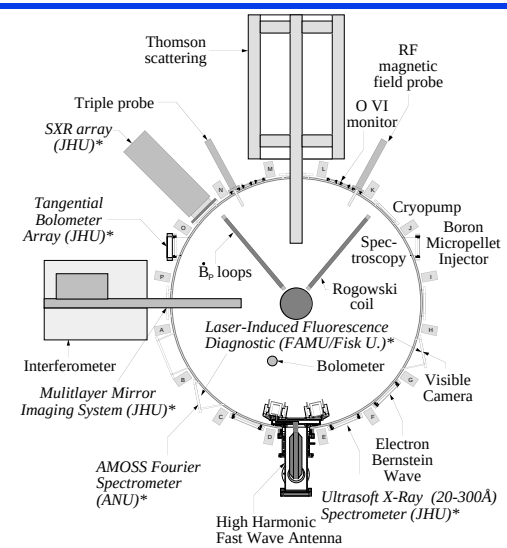

*Collaborator diagnostics

Concept for UCSD Liquid Lithium Limiter ("L3") on CDX-U

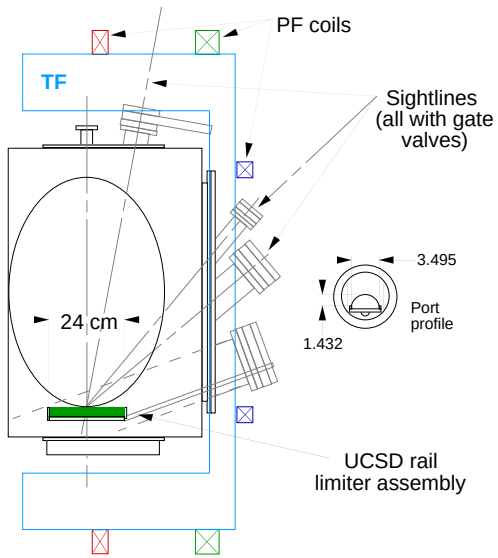

CDX-U and PISCES-B can provide a concept exploration demonstration of liquid lithium wall physics and technology

	UCSD PISCES -B	PPPL CDX-U
Magnetic geometry	Linear cylindrical	Spherical Torus
Pulse length	Steady-state	20-50 msec
Parallel heat flux	5 MW/m2	8-10 MW/m2
Normal heat flux	5 MW/m2	2-3 MW/m2
Plasma diagnostics	Probes, spectroscopy	Core and edge diagnostics
Materials diagnostics	Extensive	-
Disruptions	-	Available
Divertor	Linear simulator	Single null (future upgrade)

Physics and technology issues to be studied

- Effects of fully non-recycling lithium target on plasma
  - Plasma current penetration and equilibrium control
  - Deuterium fueling and lithium impurity accumulation
  - Effects on plasma confinement and RF coupling/heating
- Effects of plasma on the liquid lithium surface
  - jxB forces on lithium during MHD activity and disruptions
  - Possible surface coatings such as lithium hydride
- Development of technology for liquid lithium targets
  - Long-term compatibility of vessel materials with lithium
  - Safe and efficient lithium handling and cleaning

Implementation of toroidal liquid limiter will follow "L3" experiments

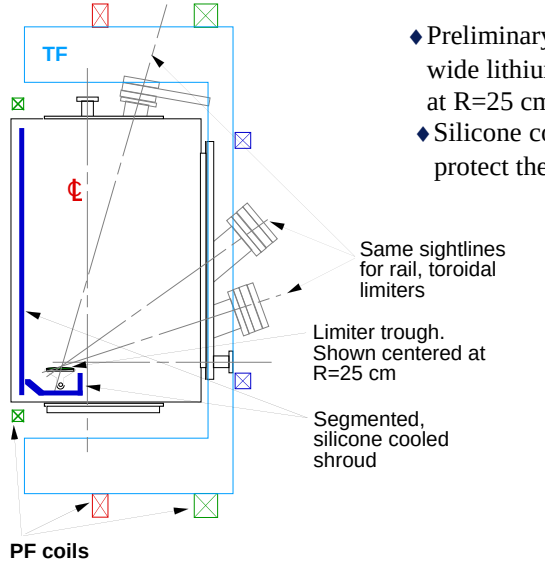

- Preliminary design is for a 10 cm wide lithium "tray" centered at R=25 cm.
- Silicone cooled shroud would protect the center stack, vessel.

Effect of plasma on liquid lithium wall

- Results of j×B forces of MHD or disruptions on surface
  - Toroidal currents can flow within continuous lithium divertor target
  - Might affect position control or MHD stability (conducting shell)
  - Halo currents from disruptions might cause lithium to "splash"
  - Large surface tension and adhesion may prevent this in practice
- Consequences of possible surface coatings formed in situ
  - Lithium nitride layer may form during introduction into vessel
  - Lithium deuteride surface may form during plasma operation
  - LiD melts at 688°C and may need removal by discharge cleaning

Divertor coils* can be readily added in a future upgrade to CDX-U

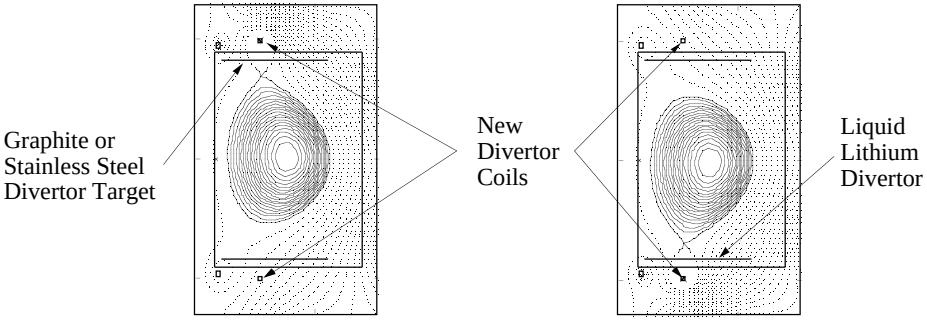

- Limiter, single-null, and double null discharges possible

**Tokamak Simulation Code (TSC) calculations performed with assistance of N. Pomphrey, B. Jones, and T. Munsat*

CDX-U Schedule for Fiscal Year 2000

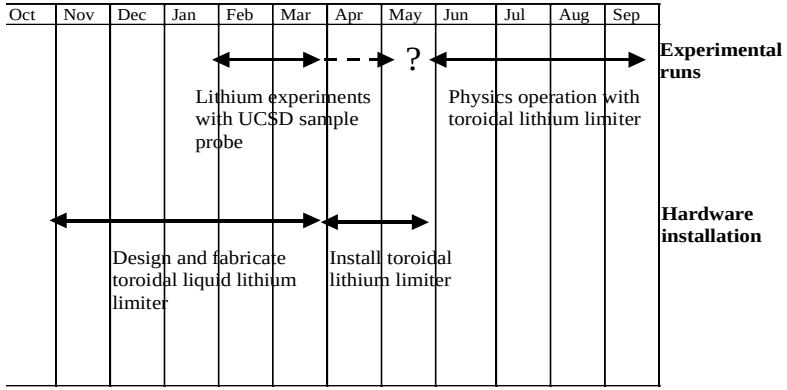

Summary

- Liquid walls are a potentially "revolutionary" solution to generic MFE first-wall problems
- CDX-U is ideally suited for investigating critical liquid wall issues quickly and economically
- PPPL has the facilities and experience to perform these experiments in a safe and well-controlled manner
- CDX-U plus existing and planned liquid wall programs can lead to implementation on NSTX, Alcator C-Mod, etc.