PPPL digest
PRINCETON PLASMA PHYSICS LABORATORY
A United States Department of Energy Facility
AUGUST 2007

X-ray Crystal Spectrometer Makes Debut at C-Mod

New Technique a Major Advance for ITER

A PPPL/Alcator C-Mod collaboration has resulted in the demonstration of a greatly improved X-ray crystal spectrometer for application to ITER and fusion reactors. Experiments conducted by a PPPL/MIT team in April mark the beginning of a new era in the ability of such devices to determine radial profiles of the ion temperature and the rotational velocity of high temperature plasmas without the need for diagnostic beams. Their success will benefit substantially ITER and other advanced fusion energy systems.

From left are MIT's Alex Ince-Cushman, PPPL's Ken Hill and Manfred Bitter, MIT's John Rice, and Christian Broennimann of the Paul Scherrer Institute in Switzerland.

The Problem

X-ray crystal spectrometers measure the frequencies and intensities of X-rays emitted by plasma impurities. When a large impurity atom invades a high-temperature plasma, most of its electrons are ripped off, leaving a large positively-charged nucleus with few electrons in orbit. When a free plasma electron comes by, it kicks one of these orbiting electrons up into a higher level, and then continues on its way. The bound electron eventually falls back to its lower orbit and emits X-rays. Researchers can identify the impurity by the pattern of frequencies, or spectrum, of the light emitted and they can determine the plasma ion temperature, as well as the rotational velocity of the bulk plasma, from this information. However, due to the lack of mirrors, lenses, and fiber bundles — which are available for optical spectroscopy but not for X-ray spectroscopy — it is more difficult to obtain spatially resolved X-ray spectra and thus profiles of the ion temperature.

Due to the large size of crystal spectrometers and the precious real estate around major tokamaks, typically only one such instrument has been installed, usually with a central sightline through the plasma to measure the ion temperature and rotation

speed at the plasma center. TFTR and Alcator C-Mod managed to install multiple spectrometers that provided up to five sightlines through the plasma. The information on the ion temperature profile obtained from those measurements was inadequate for detailed comparisons with theoretical predictions of plasma transport from modern computer codes.

The Solution

PPPL's physicists Manfred Bitter and Ken Hill initiated work on the new spectrometer several years ago. The X-ray imaging crystal spectrometer has been installed on Alcator C-Mod at the MIT Plasma Science and Fusion Center. The new concept solves the longstanding limitations on X-ray measurements. The new device uses a spherically-bent quartz crystal to separate the frequencies of X-ray light emanating from the plasma. A 150-micron-thick slice is cut from 50-mm-diameter cylindrically-shaped quartz crystal. After polishing on both sides, the circular quartz disk is placed on a precisely machined spherically-shaped concave surface, much like that of a reflecting telescope. The surfaces stick together like two glass plates. Molecular forces hold the crystal — without glue — on the substrate.

The resulting spherically-bent crystal serves as a diffraction grating. When X-ray light strikes the surface of the crystal, it is broken up into its constituent frequencies much the same way white light passing through a prism is separated into the colors of the spectrum. The imaging properties of the spherically-bent crystal permit physicists to observe simultaneously X-ray spectra from multiple sightlines through the plasma and to obtain radial profiles of the ion temperature and plasma rotation velocity from these spectral data.

The development effort has continued a longstanding and successful collaboration between PPPL researchers and the Alcator C-Mod team. "Ken and I worked very closely with C-Mod's John Rice and his graduate student, Alex Ince-Cushman, who has made very essential contributions to the design, testing, and installation of the spectrometer," according to Manfred Bitter.

The Detector

With only one sightline available, physicists needed only a one-dimensional detector. With the new devices, two-dimensional detectors are needed to image the whole plasma. When the new spectrometer was ready for proof-of-principle testing in 2003, the team was able to obtain a multi-wire proportional detector, built for use on KSTAR, from Dr. Sang Gon Lee of the Korean Basic Sciences Institute. This device did not have the count rate capability required for the new spectrometer. Nevertheless, such a detector was used to demonstrate successfully the fundamental principles of the new crystal spectrometer, first on NSTX, and later on the Alcator C-Mod thanks to the assistance of MIT's John Rice and Earl Marmar, who made a horizontal port available on C-Mod.

Fortunately, in 2005 while visiting Europe, Manfred Bitter heard about an advanced two-dimensional X-ray detector, PILATUS II, in use at a synchrotron radiation facility in Switzerland. The

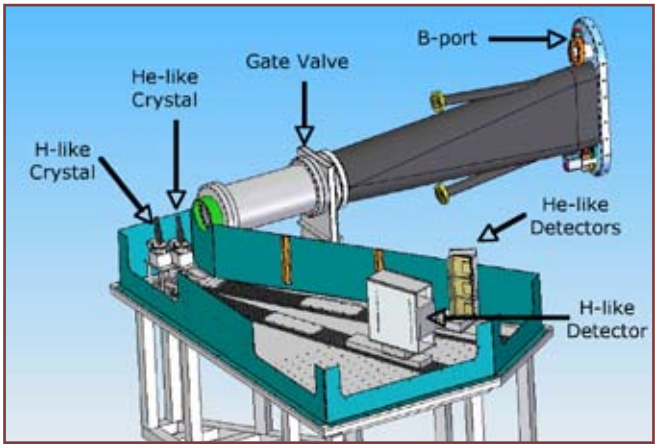

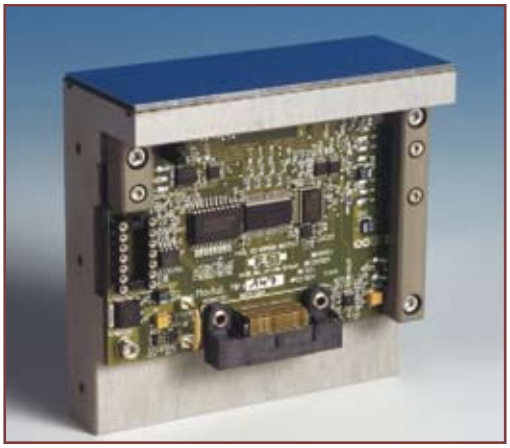

X-ray Crystal Spectrometer layout (left) and Pilatus II Detector (right).

only drawback seemed to be the cost of each unit: $80,000. At the time, Manfred did not have sufficient funds to purchase one, so he tactfully arranged a collaboration with Drs. Christian Broennimann and Eric Eikenberry of the Paul Scherrer Institute in Switzerland.

Subsequently a PILATUS II detector was tested on C-Mod in May 2006. The results were so good that everyone agreed that the PILATUS II detectors were ideal to fully exploit the potential of the spectrometer. As Manfred notes, "It's a wonder of modern electronics, since each tiny (0.172-mm x 0.172-mm) picture element or 'pixel' of this detector includes a pulse-shaping amplifier, comparator, and counter, so that you can do single photon counting. And the whole thing works at room temperature. You don't have to cool it off." PPPL's Steve Scott, currently managing the PPPL/C-Mod collaboration adds, "Currently multi-wire proportional counters have a count rate of 400,000 counts per second. The PILATUS II can count up to 10^{11} photons per second. That's more than five orders of magnitude improvement." Bitter and his colleagues expect other detectors currently under development to also be available for the new X-ray crystal spectrometer. These will be of special interest for ITER.

Experiments Begin

With $500,000 in costs for the new X-ray crystal spectrometer shared between PPPL and MIT, the team was able to proceed with the first experiments on C-Mod in April of this year. The new spectrometer can look at the entire 72-cm height of the plasma with at least 150 sightlines. The system consists of two spherically-bent crystals and four PILATUS II detector modules and is considered a prototype for the crystal spectrometers that will be used on ITER. The dimensions and layout of the ITER spectrometers will be very similar to those of the new instrument on C-Mod.

In the C-Mod experiments, physicists deliberately inject argon atoms into the plasma. At sufficiently high temperatures, 16 of argon's 18 electrons will be stripped from each atom. Physicists call this "helium-like" argon, because like a helium atom, the argon ion has two electrons. But the two electrons are in a field of 18 protons, not just two protons as in ordinary helium. This results in a helium-like spectrum shifted into the X-ray region. Ordinary helium ions would emit visible light. When all but one electron is taken from the argon, a "hydrogen-like" X-ray spectrum results. With its two crystals, the new spectrometer can measure spectra from helium-like and hydrogen-like species.

The entire plasma actually spins in the toroidal direction, i.e., the "long way" around the donut. If the plasma is spinning toward the observer, the frequency of the X-rays emitted by the argon will be higher than those from a stationary plasma. If the plasma is spinning away from the detector, the frequencies will be lower. This "Doppler Shift" is the same phenomena involved in the change of the pitch of a train whistle heard when the train passes a station. According to Steve Scott, "If all the ions were moving toward you, you would see a narrow spectrum shifted in one direction. If they are all moving away from you, it's shifted in the other direction. If the ions are moving and have temperature, the line is shifted and broadened. By the shift you get the rotation. By the broadening you get the temperature —two measurements for the price of one."

Ideal for ITER

Charge-exchange Recombination Spectroscopy, CHERS, has been the standard method for determining plasma temperature. It has been used extensively on NSTX, TFTR and earlier tokamaks. CHERS is a beam-based system that takes advantage of the widespread carbon impurity in magnetically confined plasmas. Carbon enters the plasma from the wall of the vacuum vessel. As Manfred Bitter explains, "Carbon is totally ionized in the plasma and therefore cannot emit any light. However if a hydrogen neutral-beam is injected into the plasma, the electron of the hydrogen atom is captured by the fully stripped carbon ion, and it cascades down in the carbon atom and emits (visible) light that can be used for ion temperature measurements, with better spatial resolution than that available with the

older X-ray spectrometers. However, we can only do the CHERS measurement along the beam-line and the injection of the beam affects the rotation of the plasma."

But an even more serious problem looms for larger experiments such as ITER. Current CHERS diagnostics use beams with energies in the range of 100 KeV, which is ideal for producing photons in a charge-exchange system. But researchers predict that ITER and other future devices will require 1000-KeV beams to allow adequate penetration into their larger plasmas. "Without Manfred and Ken's perseverance in developing the new X-ray crystal spectrometer, we would have to rely on difficult and limited beam-based measurements on ITER. Their innovation is ideally suited for larger, more advanced systems," said Raffi Nazikian, deputy head of PPPL's Off-site Research Department.

Manfred and Ken noted the importance of the continued support they receive from the DOE Office of Fusion Energy Sciences. Manfred said, "Darlene Markovich was instrumental in providing $200,000 each year since 2002. This funding was vital for our project, because we would not have been able to accomplish anything without it." They also expressed appreciation for the technical and financial assistance provided by Earl Marmar and John Rice at C-Mod and from the PPPL/C-Mod Collaboration managed by Steve Scott and Randy Wilson.

— by Anthony R. De Meo

Spatially resolved spectra of He-like and H-like argon and profiles of the ion temperature and toroidal plasma rotation velocity are now routinely obtained from the new X-ray imaging crystal spectrometer on Alcator C-Mod with a spatial resolution of about 1 cm and time resolution of 20 ms. At right, Figs. A-C show results obtained from a C-Mod discharge.

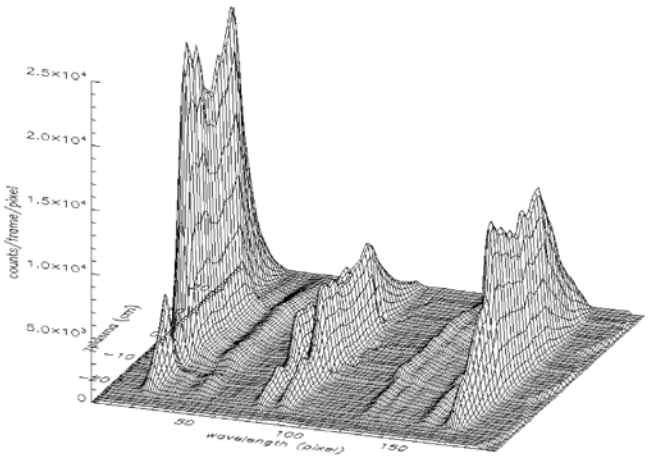

Figure A. Spatially resolved spectra of He-like argon.

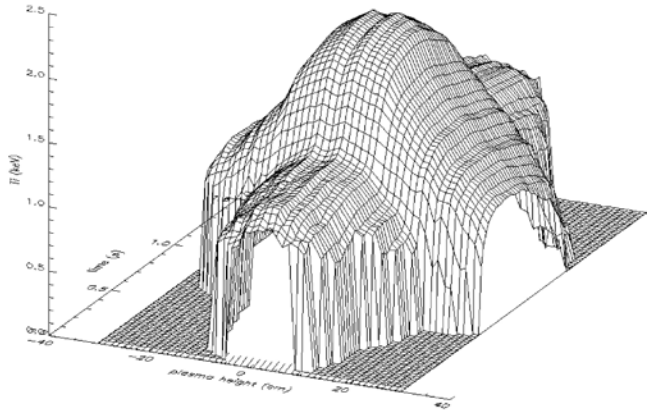

Figure B. Ion temperature profile.

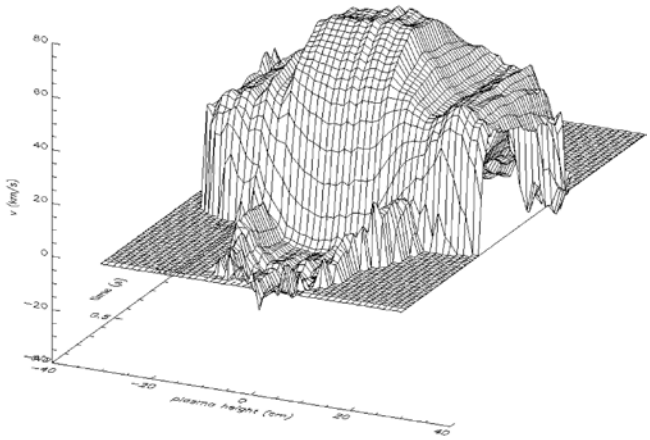

Figure C. Toroidal velocity profile.

The **PRINCETON PLASMA PHYSICS LABORATORY** is operated by Princeton University under contract to the United States Department of Energy.

For additional information, please contact: Information Services, Princeton Plasma Physics Laboratory, P.O. Box 451, Princeton, NJ 08543. Tel. (609)-243-2750, e-mail: pppl_info@pppl.gov, or visit the web site at: **www.pppl.gov** .